LOWER ASSUNPINK CREEK ECOSYSTEM RESTORATION MERCER COUNTY, NEW JERSEY

STREAM DAYLIGHTING

IFB W912BU-12-B-####

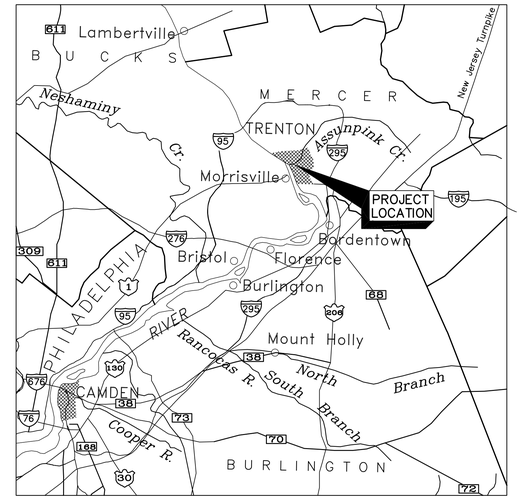

LIST OF CONTRACT DRAWINGS

SHEET	DWG. NO.	DESCRIPTION
1	G-100	VICINTIY MAP & LIST OF DRAWINGS
2	G-101	LEGEND, ABBREVIATIONS & GENERAL PLAN
3	G-200	SOIL & SEDIMENT EROSION CONTROL PLAN
4	G-201	SOIL & SEDIMENT EROSION CONTROL DETAILS
5	G-202	SOIL & SEDIMENT EROSION CONTROL NOTES
6	L-100	PLANTING PLAN AND DETAILS
7	C-100	DEMOLITION & EXISTING CONDITIONS PLAN
8	C-101	PLAN – STATION 1+00 TO STATION 3+64.3
9	C-102	PLAN – STATION 3+64.3 TO STATION 6+14
10	C-200	CHANNEL PROFILE – STATION 1+00 TO STATION 6+14
11	C-300	CROSS SECTIONS – DS FACE OF BROAD ST. BRIDGE TO STA. 1+75
12	C-301	CROSS SECTIONS – STA. 2+00 TO STA. 2+75
13	C-302	CROSS SECTIONS – STA. 3+00 TO STA. 3+75
14	C-303	CROSS SECTIONS – STA. 4+00 TO STA. 4+75
15	C-304	CROSS SECTIONS – STA. 5+00 TO STA. 5+75
16	C-305	CROSS SECTIONS – STA. 6+00, TYPICAL SECTIONS & FENCE DETAILS
17	C-400	GABION DETAILS
18	C-401	MISCELLANEOUS DETAILS
19	S-500	WALL PROFILES AND SECTIONS
20	S-501	WALL REINFORCEMENT

US Army Corps of Engineers
Philadelphia District

Mark	Description	Date	Appr.	Mark	Description	Date	Appr.

Rev.

Date: 06 OCT 2011
IFB W912BU-XX-X-XXX
Drawing Code: DWG SUBMITTAL
File name: *.dwg
Plot date: –
Plot scale: 1" = 1"

Designed by: MKP
Dwn by: MKP
Ckd by: DCL
Reviewed by: TTH
Submitted by: JRA
Chief, Design Branch

U.S. ARMY ENGINEER DISTRICT, PHILADELPHIA
CORPS OF ENGINEERS
PHILADELPHIA, PENNSYLVANIA

LOWER ASSUNPINK CREEK ECOSYSTEM RESTORATION
MERCER COUNTY, NEW JERSEY
STREAM DAYLIGHTING
VICINITY MAP - LOCATION MAP & LIST OF DRAWINGS

Sheet reference number:
G-100
Sheet 1 of 20

LEGEND

- STATE OF NJ PROPERTY LINE
- SURVEY AND CONSTRUCTION BASELINE
- 23 — EXISTING CONTOUR LINE
- DEMOLITION
- EXIST. BEAM GUIDE RAIL
- X — X — EXISTING FENCE
- ST — ST — EXISTING STORM LINE
- HW — HW — EXISTING HOT WATER PIPE
- CW — CW — EXISTING COLD WATER PIPE
- EC — EC — EXISTING ELECTRIC CONDUIT
- GUIDE RAIL
- CANTILEVER RETAINING WALL
- TOP OF SLOPE
- LIMIT OF RIPRAP
- RIPRAP
- BOTTOM EDGE OF CHANNEL
- CONTOUR LINE
- 6' HIGH CHAIN LINK FENCE

ABBREVIATIONS/SYMBOLS

DIP	DUCTILE IRON PIPE
PVC	POLYVINYL CHLORIDE PIPE
RCP	REINFORCED CONCRETE PIPE
	EXISTING COVER
	EXISTING GRATE
	EXISTING PARKING METER
	EXISTING LIGHT POLE
	EXISTING SIGN
	EXISTING TREE
	EXISTING UTILITY MANHOLE
AC–01	MONITORING WELL
TP–01	TEST PIT
SB–01	SOIL BORING

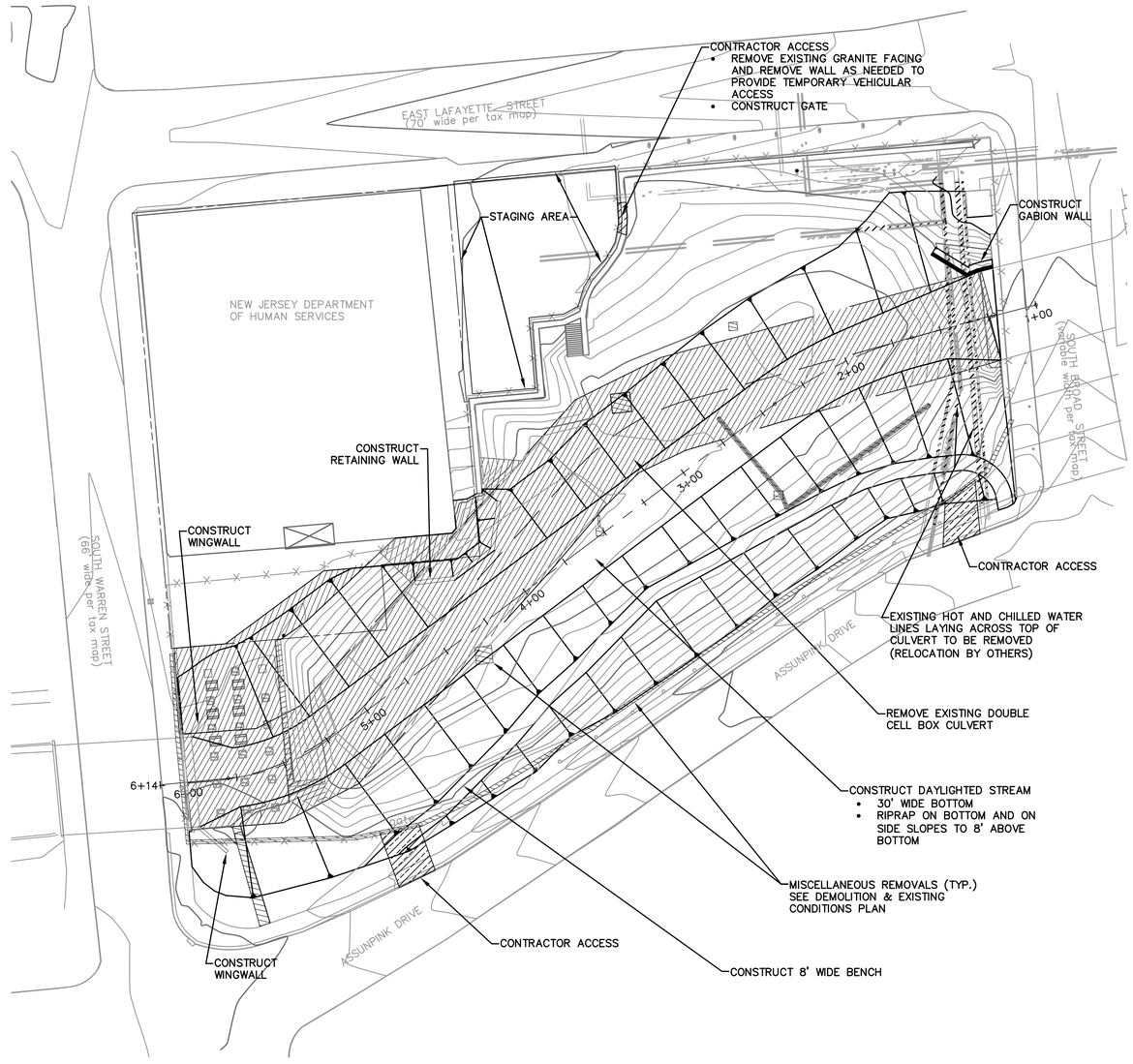

GENERAL PLAN

SCALE IN FEET

0 30 60 90 120 150

US Army Corps of Engineers
Philadelphia District

Mark	Description	Date	Appr.	Mark	Description	Date	Appr.

U.S. ARMY ENGINEER DISTRICT, PHILADELPHIA
CORPS OF ENGINEERS
PHILADELPHIA, PENNSYLVANIA

Designed by: MKP | Dwn by: MKP | Ckd by: DCL | Reviewed by: TTL | Submitted by: JRA Chief, Design Branch

Date: 06 OCT 2011 | Rev.
IFB W912BU–XX–X–XXX
Drawing Code: DWG SUBMITTAL
File name: *.dwg
Plot date: ~
Plot scale: 1" = 1"

LOWER ASSUNPINK CREEK ECOSYSTEM RESTORATION
MERCER COUNTY, NEW JERSEY
STREAM DAYLIGHTING

LEGEND, ABBREVIATIONS & GENERAL PLAN

Sheet reference number:
G–101
Sheet 2 of 20

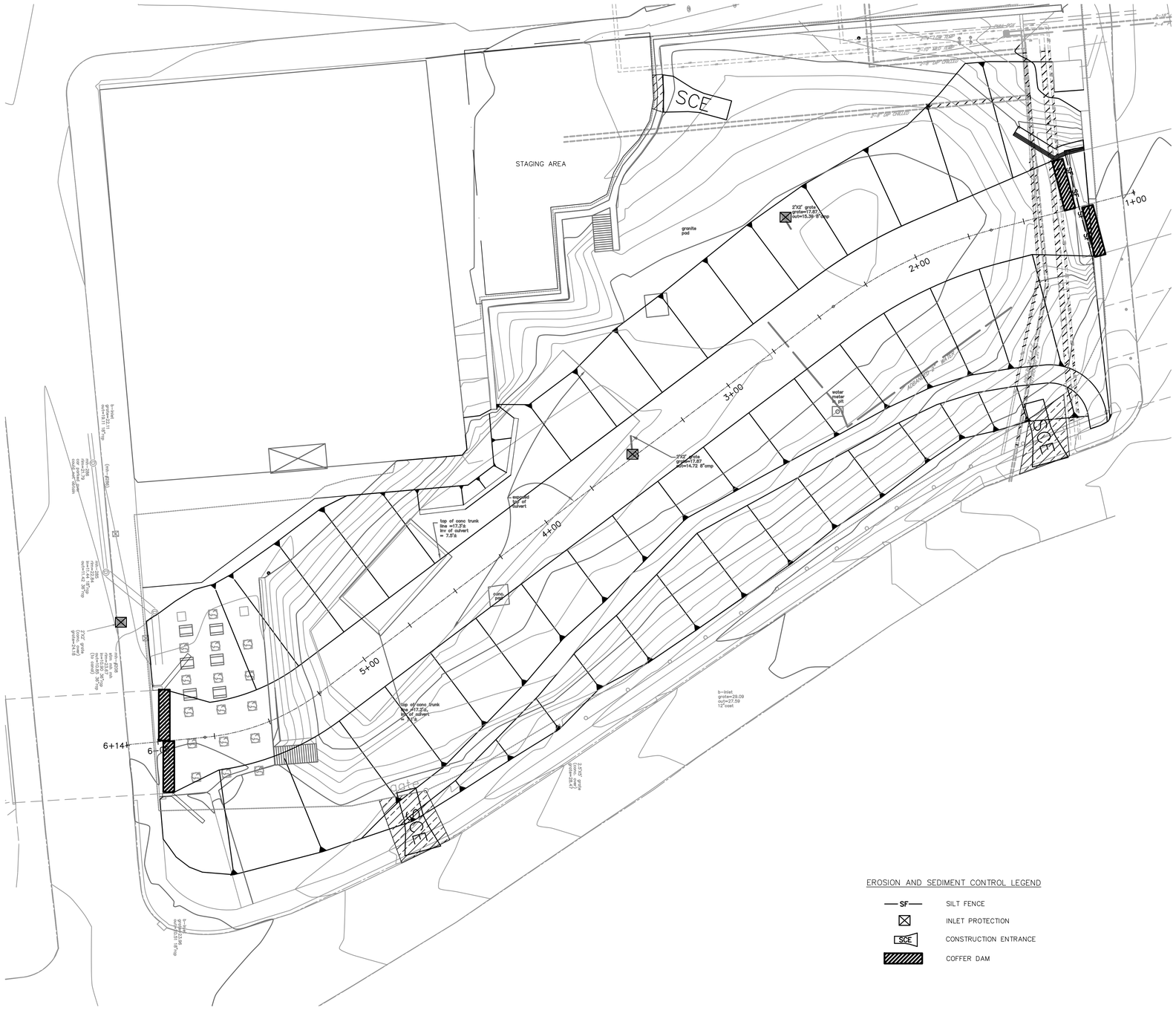

EROSION AND SEDIMENT CONTROL LEGEND

—SF—	SILT FENCE
⊠	INLET PROTECTION
SCE	CONSTRUCTION ENTRANCE
▨	COFFER DAM

SOIL & SEDIMENT EROSION CONTROL PLAN

SCALE IN FEET

0 20 40 60 80 100

US Army Corps of Engineers
Philadelphia District

Mark	Description	Date	Appr.

Mark	Description	Date	Appr.

U.S. ARMY ENGINEER DISTRICT, PHILADELPHIA
CORPS OF ENGINEERS
PHILADELPHIA, PENNSYLVANIA

Designed by: MKP
Dwn by: MKP
Ckd by: DCL
Reviewed by: TTL
Submitted by: JRA
Chief, Design Branch
Date: 05 OCT 2011
Rev.
FFB W912BU-XX-X-XXX
Drawing Code: DETAIL
File name: * dwg
Plot date: ~
Plot scale: 1" = 1"

LOWER ASSUNPINK CREEK, ECOSYSTEM RESTORATION
MERCER COUNTY, NEW JERSEY
STREAM DAYLIGHTING
SOIL & SEDIMENT EROSION CONTROL PLAN

Sheet reference number:
G-200
Sheet 3 of 20

Stabilized Construction Access Detail

Figure 29-1: Stabilized Construction Access

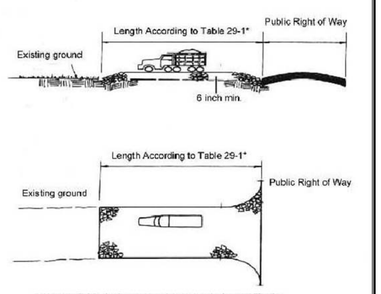

* Note: Individual lot access points may require stabilization.
Thickness shown is for stone construction entrance only (typ).

Table 29-1: Lengths of Construction Exits on Sloping Roadbeds

Percent Slope of Roadway	Length of Stone Required	
	Coarse Grained Soils	Fine Grained Soils
0 to 2%	50 ft.	100 ft.
2 to 5%	100 ft.	200 ft.
> 5%	Entire surface stabilized with FABC base course*	

** As prescribed by local ordinance or other governing authority.*

EROSION CONTROL MATTING*
CHANNEL AND STEEP SLOPE PROTECTION

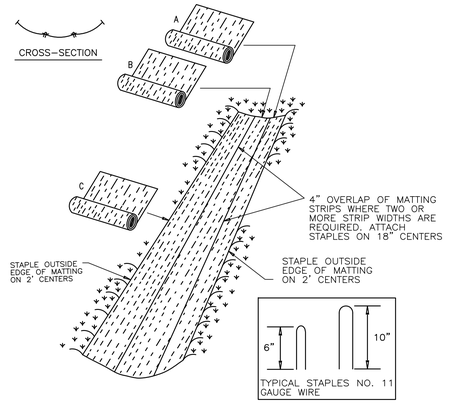

CONSTRUCTION SPECIFICATIONS

1. KEY-IN THE MATTING BY PLACING THE TOP ENDS OF THE MATTING IN A NARROW TRENCH, 6" IN DEPTH. BACKFILL THE TRENCH AND TAMP FIRMLY TO CONFORM TO THE CHANNEL CROSS-SECTION. SECURE WITH A ROW OF STAPLES ABOUT 4" DOWN SLOPE FROM THE TRENCH. SPACING BETWEEN STAPLES IS 6".

2. STAPLE THE 4" OVERLAP IN THE CHANNEL CENTER USING AN 18" SPACING BETWEEN STAPLES.

3. BEFORE STAPLING THE OUTER EDGES OF THE MATTING, MAKE SURE THE MATTING IS SMOOTH AND IN FIRM CONTACT WITH THE SOIL.

4. WHERE ONE ROLL OF MATTING ENDS AND ANOTHER BEGINS, THE END OF THE TOP STRIP SHALL OVERLAP THE UPPER END OF THE LOWER STRIP BY 4", SHIPLAP FASHION. REINFORCE THE OVERLAP WITH A DOUBLE ROW OF STAPLES SPACED 6" APART IN A STAGGERED PATTERN ON EITHER SIDE.

5. EROSION CONTROL MAT SHALL BE INSTALLED IN ALL LOCATIONS WHERE SEEDING CANNOT BE COMPLETED WITHIN 2 WEEKS OF FINAL GRADING.

6. THE DISCHARGE END OF THE MATTING LINER SHOULD BE SIMILARLY SECURED WITH 2 DOUBLE ROWS OF STAPLES.

NOTE: IF FLOW WILL ENTER FROM THE EDGE OF THE MATTING THEN THE AREA EFFECTED BY THE FLOW MUST BE KEYED-IN.

* IF ANY EROSION OCCURS WITHIN SWALES OR ALONG ANY SLOPED AREA, EROSION CONTROL BLANKET SHALL BE PROVIDED.

PUMPED WATER FILTER BAG

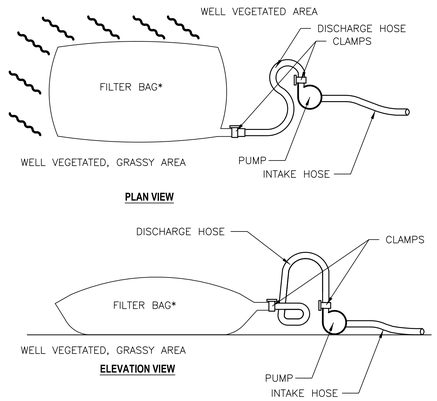

SPECIFICATIONS FOR FILTER BAGS

1. FILTER BAGS SHALL BE MADE FROM NON-WOVEN GEOTEXTILE MATERIAL SEWN WITH HIGH STRENGTH, DOUBLE STITCHED "J" TYPE SEAMS. THEY SHALL BE CAPABLE OF TRAPPING PARTICLES LARGER THAN 150 MICRONS.

2. A SUITABLE MEANS OF ACCESSING THE BAG WITH MACHINERY REQUIRED FOR DISPOSAL PURPOSES SHALL BE PROVIDED. FILTER BAGS SHALL BE REPLACED WHEN THEY BECOME 1/2 FULL. SPARE BAGS SHALL BE KEPT ON-SITE FOR REPLACEMENT OF THOSE THAT HAVE FAILED OR ARE FILLED.

3. BAGS SHALL BE LOCATED IN WELL-VEGETATED AREAS, AND DISCHARGE ONTO STABLE, EROSION RESISTANT AREAS. A GEOTEXTILE FLOW PATH MAY BE PROVIDED. BAGS SHALL NOT BE PLACED ON SLOPES GREATER THAN 5%.

4. THE PUMP DISCHARGE HOSE SHALL BE INSERTED INTO THE BAGS IN THE MANNER SPECIFIED BY THE MANUFACTURER AND SECURELY CLAMPED.

5. THE PUMPING RATE SHALL BE NO GREATER THAN 750 GPM OR $\frac{1}{2}$ THE MAXIMUM SPECIFIED BY THE MANUFACTURER, WHICHEVER IS LESS. PUMP INTAKES SHALL BE FLOATING AND SCREENED.

6. FILTER BAGS SHALL BE INSPECTED DAILY. IF ANY PROBLEM IS DETECTED, PUMPING SHALL CEASE IMMEDICATELY AND NOT RESUME UNTIL THE PROBLEM IS CORRECTED.

INLET PROTECTION – SILT SACK OR APPROVED EQUAL

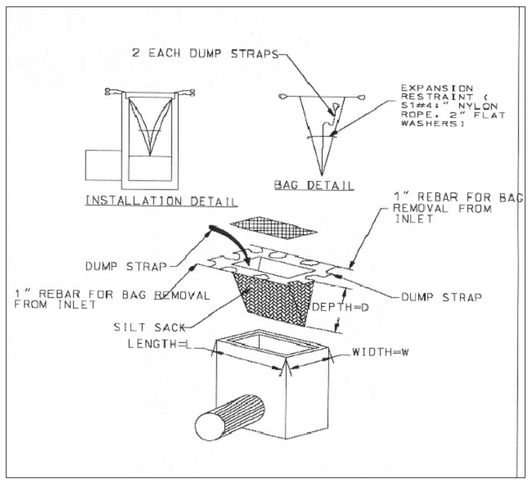

Silt Fence Detail

Figure 25-2 Silt Fence construction and installation detail

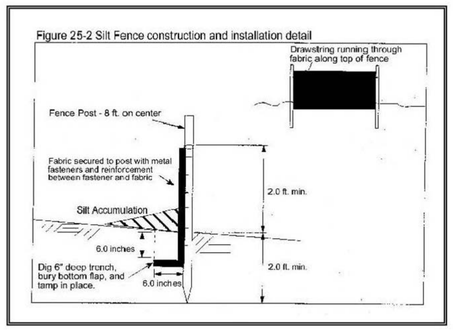

THIS PROJECT WAS DESIGNED BY THE PHILADELPHIA DISTRICT OF THE U.S. ARMY CORPS OF ENGINEERS. THE INITIALS OR SIGNATURES AND REGISTRATION DESIGNATIONS OF INDIVIDUALS APPEAR ON THESE PROJECT DOCUMENTS WITHIN THE SCOPE OF THEIR EMPLOYMENT AS REQUIRED BY ER 1110-1-8152.

SUBMITTED:

JOSE R. ALVAREZ, P.E.
CHIEF, ENGINEERING BRANCH

APPROVED:

PETER M. TRANCHIK, P.E.
CHIEF, ENGINEERING & CONSTRUCTION DIVISION

US Army Corps of Engineers
Philadelphia District

Mark	Description	Date	Appr.

U.S. ARMY ENGINEER DISTRICT, PHILADELPHIA
CORPS OF ENGINEERS
PHILADELPHIA, PENNSYLVANIA

Designed by: LDB | Date: 06 OCT 2011 | Rev:
Dwn by: --- | Ckd by: --- | IFB W912BU-XX-X-XXX
Reviewed by: --- | Drawing Code: WS, SUBMITTAL
Submitted by: --- | File name: --- | Plot date: --- | Plot scale: 1" = 1"
Chief, Design Branch

LOWER ASSUNPINK CREEK ECOSYSTEM RESTORATION
MERCER COUNTY, NEW JERSEY
STREAM DAYLIGHTING
EROSION AND SEDIMENT CONTROL PLAN DETAILS

Sheet reference number:
G-201
Sheet 4 of 20

EROSION AND SEDIMENT CONTROL NOTES

1. THE CONTRACTOR SHALL NOTIFY MERCER COUNTY SOIL CONSERVATION DISTRICT (MCSCD) AT (609) 586-9603 FORTY-EIGHT (48) HOURS IN ADVANCE OF ANY LAND DISTURBING ACTIVITY.

2. AT LEAST 7 DAYS PRIOR TO THE START OF EARTH-DISTURBING ACTIVITIES, THE CONTRACTOR SHALL BE REQUIRED TO HOLD A PRE-CONSTRUCTION MEETING BETWEEN PROJECT REPRESENTATIVES, REPRESENTATIVE OF THE MCSCD, AND CONTRACTING OFFICER.

3. ALL WORK SHALL BE DONE IN ACCORDANCE WITH THE STANDARDS FOR SOIL EROSION AND SEDIMENT CONTROL IN NEW JERSEY (STATE STANDARDS).

4. ALL SOIL EROSION AND SEDIMENT CONTROL PRACTICES SHALL BE INSTALLED PRIOR TO ANY MAJOR SOIL DISTURBANCES, OR IN THEIR PROPER SEQUENCE AND MAINTAINED UNTIL PERMANENT PROTECTION IS ESTABLISHED.

5. ANY CHANGES TO THE CERTIFIED SOIL EROSION AND SEDIMENT CONTROL PLAN WILL REQUIRE THE SUBMISSION OF REVISED SOIL EROSION AND SEDIMENT CONTROL PLANS TO THE CONTRACTING OFFICER AND THE MCSCD FOR RECERTIFICATION. THE REVISED PLANS SHALL MEET ALL CURRENT STATE SOIL EROSION AND SEDIMENT CONTROL STANDARDS.

6. THE CONTRACTOR SHALL BE RESPONSIBLE FOR REMEDIATING ANY EROSION OR SEDIMENT PROBLEMS THAT ARISE AS A RESULT OF ONGOING CONSTRUCTION AT THE REQUEST OF THE MCSCD.

7. THE CONTRACTOR IS RESPONSIBLE FOR IMPLEMENTATION AND MAINTENANCE OF THE APPROVED PLAN AND ALL OTHER MEASURES NECESSARY TO CONTROL, FILTER, OR PREVENT SEDIMENT FROM LEAVING THE SITE.

8. THE CONTRACTOR SHALL PROTECT ALL POINTS OF CONSTRUCTION INGRESS AND EGRESS TO PREVENT THE DEPOSITION OF MATERIALS ONTO PUBLIC OR GOVERNMENT ROADS DURING THE LIFE OF THE PROJECT. ALL MATERIALS DEPOSITED ONTO PUBLIC OR GOVERNMENT ROADS SHALL BE REMOVED IMMEDIATELY.

9. TRAFFIC CONTROL STANDARDS REQUIRE THE INSTALLATION OF A 50'X30'X1' PAD OF 1.5" OR 2" STONE, AT ALL CONSTRUCTION DRIVEWAYS, IMMEDIATELY AFTER INITIAL SITE DISTURBANCE.

10. INSPECTIONS: THE CONTRACTOR SHALL INSPECT DISTURBED AREAS OF THE CONSTRUCTION SITE, AREAS USED FOR STORAGE OF MATERIALS THAT ARE EXPOSED TO PRECIPITATION THAT HAVE NOT BEEN FINALLY STABILIZED, STABILIZATION PRACTICES, STRUCTURAL PRACTICES, OTHER CONTROLS, AND AREAS WHERE VEHICLES EXIT THE SITE AT LEAST ONCE EVERY SEVEN (7) CALENDAR DAYS AND WITHIN 24 HOURS OF THE END OF ANY STORM THAT PRODUCES 0.5 INCHES OR MORE OF RAINFALL AT THE SITE. WHERE SITES HAVE BEEN FINALLY STABILIZED, SUCH INSPECTIONS SHALL BE CONDUCTED AT LEAST ONCE EVERY MONTH. DISTURBED AREAS AND AREAS USED FOR MATERIAL STORAGE THAT ARE EXPOSED TO PRECIPITATION SHALL BE INSPECTED FOR EVIDENCE OF, OR THE POTENTIAL FOR, POLLUTANTS ENTERING THE DRAINAGE SYSTEM. EROSION AND SEDIMENT CONTROL MEASURES SHALL BE OBSERVED TO ENSURE THAT THEY ARE OPERATING CORRECTLY. DISCHARGE LOCATIONS OR POINTS SHALL BE INSPECTED TO ASCERTAIN WHETHER EROSION CONTROL MEASURES ARE EFFECTIVE IN PREVENTING SIGNIFICANT IMPACTS TO RECEIVING WATERS. LOCATIONS WHERE VEHICLES EXIT THE SITE SHALL BE INSPECTED FOR EVIDENCE OF OFFSITE SEDIMENT TRACKING. FOR EACH INSPECTION CONDUCTED, THE CONTRACTOR SHALL PREPARE A REPORT SUMMARIZING THE SCOPE OF THE INSPECTION, NAME(S) AND QUALIFICATIONS OF PERSONNEL MAKING THE INSPECTION, THE DATE(S) OF THE INSPECTION, MAJOR OBSERVATIONS RELATING TO THE IMPLEMENTATION OF THE EROSION AND SEDIMENT CONTROL PLAN, MAINTENANCE PERFORMED, AND ACTIONS TAKEN. THE REPORT SHALL BE FURNISHED TO THE CONTRACTING OFFICER WITHIN 24 HOURS OF THE INSPECTION AS A PART OF THE CONTRACTOR'S DAILY QUALITY CONTROL REPORT. A COPY OF THE INSPECTION REPORT SHALL BE MAINTAINED AT THE JOB SITE.

11. UNTIL THE SITE ACHIEVES FINAL STABILIZATION, THE CONTRACTOR SHALL ASSURE THAT THE BMPS ARE IMPLEMENTED, OPERATED, AND MAINTAINED PROPERLY AND COMPLETELY. MAINTENANCE SHALL INCLUDE INSPECTIONS OF ALL BMP FACILITIES. ALL MAINTENANCE WORK, INCLUDING CLEANING, REPAIR, REPLACEMENT, REGRADING, AND RESTABILIZATION SHALL BE PERFORMED IMMEDIATELY. IF EROSION AND SEDIMENT CONTROL BMPS FAIL TO PERFORM AS EXPECTED, REPLACEMENT BMPS, OR MODIFICATIONS OF THOSE INSTALLED SHALL BE REQUIRED.

12. IMMEDIATELY UPON DISCOVERING UNFORESEEN CIRCUMSTANCES POSING THE POTENTIAL FOR ACCELERATED EROSION AND/OR SEDIMENT POLLUTION, THE CONTRACTOR SHALL IMPLEMENT APPROPRIATE BMPS TO ELIMINATE POTENTIAL FOR ACCELERATED EROSION AND/OR SEDIMENT POLLUTION.

13. AN AREA SHALL BE CONSIDERED TO HAVE ACHIEVED FINAL STABILIZATION WHEN IT HAS A MINIMUM UNIFORM 80% PERENNIAL VEGETATIVE COVER, OR OTHER PERMANENT NON-VEGETATIVE COVER, AND MOWED ONCE WITH A DENSITY SUFFICIENT TO RESIST ACCELERATED SURFACE EROSION AND SUBSURFACE CHARACTERISTICS SUFFICIENT TO RESIST SLIDING AND OTHER MOVEMENTS.

14. THE SITE'S APPROVAL LETTER, APPROVED EROSION AND SEDIMENT CONTROL PLANS, DAILY LOG BOOKS AND TEST REPORTS SHALL BE AVAILABLE AT THE SITE AT ALL TIMES FOR INSPECTION BY DULY AUTHORIZED OFFICIALS OF THE MCSCD AND THE CONTRACTING OFFICER.

15. DUST PARTICLES, AEROSOLS AND GASEOUS BY-PRODUCTS FROM CONSTRUCTION ACTIVITIES, AND PROCESSING AND PREPARATION OF MATERIALS, SUCH AS FROM ASPHALTIC BATCH PLANTS, SHALL BE CONTROLLED AT ALL TIMES, INCLUDING WEEKENDS, HOLIDAYS AND HOURS WHEN WORK IS NOT IN PROGRESS. THE CONTRACTOR SHALL MAINTAIN EXCAVATIONS, STOCKPILES, HAUL ROADS, PERMANENT AND TEMPORARY ACCESS ROADS, PLANT SITES, SPOIL AREAS, BORROW AREAS, AND OTHER WORK AREAS WITHIN OR OUTSIDE THE PROJECT BOUNDARIES, FREE FROM PARTICULATES WHICH WOULD CAUSE THE FEDERAL, STATE, AND LOCAL AIR POLLUTION STANDARDS TO BE EXCEEDED OR WHICH WOULD CAUSE A HAZARD OR A NUISANCE. SPRINKLING, CHEMICAL TREATMENT OF AN APPROVED TYPE, BAGHOUSE, SCRUBBERS, ELECTROSTATIC PRECIPITATORS OR OTHER METHODS WILL BE PERMITTED TO CONTROL PARTICULATES IN THE WORK AREA. SPRINKLING, TO BE EFFICIENT, SHALL BE REPEATED TO KEEP THE DISTURBED AREA DAMP AT ALL TIMES. THE CONTRACTOR SHALL HAVE SUFFICIENT, COMPETENT EQUIPMENT AVAILABLE TO ACCOMPLISH THESE TASKS. PARTICULATE CONTROL SHALL BE PERFORMED AS THE WORK PROCEEDS AND WHENEVER A PARTICULATE NUISANCE OR HAZARD OCCURS. THE CONTRACTOR SHALL COMPLY WITH ALL STATE AND LOCAL VISIBILITY REGULATIONS.

16. TEMPORARY SEDIMENT CONTROL DEVICES MAY BE REMOVED, WITH PERMISSION OF MCSCD INSPECTOR AND THE CONTRACTING OFFICER, FOLLOWING ACHIEVEMENT OF PERMANENT STABILIZATION IN ALL CONTRIBUTORY DRAINAGE AREAS. STORMWATER MANAGEMENT STRUCTURES USED TEMPORARILY FOR SEDIMENT CONTROL SHALL BE CONVERTED TO THE PERMANENT CONFIGURATION WITHIN THIS TIME PERIOD AS WELL. AREAS DISTURBED DURING REMOVAL OF TEMPORARY BMPS SHALL BE STABILIZED IMMEDIATELY.

17. WHEN PUMPING SEDIMENT-LADEN WATER, THE DISCHARGE SHALL BE DIRECTED THROUGH A SEDIMENT CONTROL BMP, SUCH AS A PUMPED WATER FILTER BAG DISCHARGING OVER NON-DISTURBED AREAS. SEDIMENT REMOVED FROM BASINS OR OTHER BMPS SHALL BE PLACED AND STABILIZED IN APPROVED AREAS, BUT NOT WITHIN A FLOODPLAIN, DRAINAGE SWALE, WETLAND OR TREE-SAVE AREA OR ON STEEP SLOPES.

18. STOCKPILE HEIGHTS SHALL NOT EXCEED 35 FEET. STOCKPILE SLOPES SHALL BE 2:1 OR FLATTER. STOCKPILES SHALL BE PLACED IN DESIGNATED STOCKPILE AREAS AND PROTECTED BY EROSION AND SEDIMENT CONTROL MEASURES AND STABILIZED.

19. THE CONTRACTOR SHALL ASSURE THAT A SOIL EROSION AND SEDIMENT CONTROL PLAN HAS BEEN PREPARED, APPROVED BY THE MCSCD, AND IS BEING IMPLEMENTED AND MAINTAINED FOR ALL SOIL AND/OR ROCK SPOIL AND BORROW AREAS, REGARDLESS OF THEIR LOCATIONS.

20. THE CONTRACTOR SHALL REMOVE FROM THE SITE, RECYCLE, OR DISPOSE OF ALL BUILDING MATERIALS AND WASTES IN ACCORDANCE WITH THE SOLID WASTE REGULATIONS AT NJSA 7:26-16 ET SEQ. THE CONTRACTOR SHALL NOT ILLEGALLY BURY, DUMP OR DISCHARGE ANY BUILDING MATERIAL OR WASTES AT THE SITE.

21. ANY DISTURBED AREAS THAT WILL BE LEFT EXPOSED MORE THAN 30 DAYS AND NOT SUBJECT TO CONSTRUCTION TRAFFIC, WILL IMMEDIATELY RECEIVE A TEMPORARY SEEDING. IF THE SEASON PREVENTS THE ESTABLISHMENT OF A TEMPORARY COVER, THE DISTURBED AREAS WILL BE MULCHED WITH STRAW, OR EQUIVELENT MATERIAL, AT A RATE OF TWO (2) TONS PER ACRE, ACCORDING TO THE STATE STANDARDS.

22. IMMEDIATELY FOLLOWING INITIAL DISTURBANCE OR ROUGH GRADING, ALL CRITICAL AREAS SUBJECT TO EROSION (I.E. STEEP SLOPES, ROADWAY EMBANKMENTS) WILL RECEIVE A TEMPORARY SEEDING IN COMBINATION WITH STRAW MULCH OR A SUITABLE EQUIVALENT AT A RATE OF TWO (2) TONS PER ACRE, ACCORDING TO THE STATE STANDARDS.

23. ANY STEEP SLOPE RECEIVING PIPELINE INSTALLATION SHALL BE BACKFILLED AND STABILIZED DAILY, AS INSTALLATION PROCEEDS (I.E. SLOPES GREATER THAN 3:1).

24. PERMANENT VEGETATION SHALL BE SEEDED ON ALL EXPOSED AREAS WITHIN TEN (10) DAYS AFTER FINAL GRADING. MULCH SHALL BE USED FOR PROTECTION UNTIL SEEDING IS ESTABLISHED.

25. IN ACCORDANCE WITH THE STATE STANDARD FOR PERMANENT VEGETATIVE COVER FOR SOIL STABILIZATION, ANY SOIL HAVING A pH OF 4 OR LESS OR CONTAINING IRON SULFIDES SHALL BE COVERED WITH A MINIMUM OF 12" OF SOIL HAVING A pH OF 5 OR MORE PRIOR TO SEEDBED PREPARATION.

26. MULCHING TO THE STATE STANDARDS IS REQUIRED FOR OBTAINING A CONDITIONAL REPORT OF COMPLIANCE. CONDITIONALS ARE ONLY ISSUED WHEN THE SEASON PROHIBITS SEEDING.

27. CONDUIT OUTLET PROTECTION SHALL BE INSTALLED AT ALL REQUIRED OUTFALLS PRIOR TO THE DRAINAGE SYSTEM BECOMING OPERATIONAL.

28. THE MCSCD SHALL BE NOTIFIED OF ANY CHANGES IN OWNERSHIP.

29. HYDROSEEDING IS A TWO STEP PROCESS. THE FIRST STEP INCLUDES SEED, FERTILIZER, LIME, ETC., ALONG WITH MINIMAL AMOUNTS OF MULCH TO PROMOTE CONSISTENCY, GOOD SEED TO SOIL CONTACT, AND GIVE A VISUAL INDICATION OF COVERAGE. UPON COMPLETION OF SEEDING OPERATIONS, HYDRO-MULCH SHALL BE APPLIED AT A RATE OF 1500 LBS. PER ACRE IN THE SECOND STEP. THE USE OF HYDRO-MULCH, AS OPPOSED TO STRAW, IS LIMITED TO OPTIMUM SEEDING DATES AS LISTED IN THE STATE STANDARDS. HYDRO-MULCH SHALL NOT BE APPLIED ON STEEP SLOPES.

30. ANY SEDIMENT WASHED, TRACKED OR SPILLED ONTO PAVED SURFACES SHALL BE REMOVED IMMEDIATELY.

31. AT THE TIME WHEN THE SITE PREPARATION FOR PERMANENT VEGETATIVE STABILIZATION IS GOING TO BE ACCOMPLISHED, ANY SOIL THAT WILL NOT PROVIDE A SUITABLE ENVIRONMENT TO SUPPORT ADEQUATE VEGETATIVE GROUND COVER, SHALL BE REMOVED OR TREATED IN SUCH A WAY THAT WILL PERMANENTLY ADJUST THE SOIL CONDITIONS AND RENDER IT SUITABLE FOR VEGETATIVE GROUND COVER. IF THE REMOVAL OR TREATMENT OF THE SOIL WILL NOT PROVIDE SUITABLE CONDITIONS, NON-VEGETATIVE MEANS OF PERMANENT GROUND STABILIZATION WILL HAVE TO BE EMPLOYED.

SEEDING:

TEMPORARY STABILIZATION:
1. COOL SEASON SPECIES:
100% PERENNIAL RYEGRASS
APPLICATION RATE: 100.0 LBS / AC
SEEDING SEASON DATES: MARCH 1 TO MAY 15 AND AUGUST 15 TO OCTOBER 1

OR
100% CEREAL RYE
APPLICATION RATE: 112.0 LBS / AC
SEEDING SEASON DATES: OCTOBER 1 TO NOVEMBER 15

2. WARM SEASON SPECIES:
40% PEARL MILLET, 40% MILLET (GERMAN OR HUNGARIAN), 20% WEEPING LOVEGRASS
APPLICATION RATE: 100.0 LBS / AC
SEEDING SEASON DATES: MAY 15 TO AUGUST 15
SEE PERMANENT STABILIZATION FOR FERTILIZER TYPE/RATE, LIME RATE, AND MULCH TYPE/RATE

PERMANENT STABILIZATION:
SPECIES:
30% CHEWINGS FESCUE
35% CREEPING RED FESCUE
15% KENTUCKY BLUEGRASS
20% PERENNIAL RYEGRASS
APPLICATION RATE: 200 LBS / AC

FERTILIZER TYPE: 10-20-10
FERTILIZER APPLICATION RATE*: 500 LBS / AC
LIMING RATE*:
CLAY, CLAY LOAM, AND HIGH ORGANIC SOIL: 3 TONS / AC
SANDY LOAM, LOAM, SILT LOAM: 2 TONS / AC
LOAMY SAND, SAND: 1 TON / AC
MULCH TYPE: STRAW OR HAY
STRAW OR HAY MULCHING RATE: 1.5 TO 3.0 TONS / AC)
OPTIMUM SEEDING SEASON DATES: MARCH 1 TO MAY 15 AND AUGUST 15 TO OCTOBER 15

* GENERALIZED RATES ARE INDICATED. GROUND LIMESTONE AND FERTILIZER SHALL BE APPLIED ACCORDING TO SOIL TEST RECOMMENDATIONS.

MATERIALS FOR SEED, MULCH, SOIL SUPPLEMENTS, HERBICIDES, AND OTHER ITEMS RELEVANT TO THE SEEDING PROCESS SHALL BE IN ACCORDANCE WITH THE REQUIREMENTS OF THE STANDARDS FOR SOIL EROSION AND SEDIMENT CONTROL IN NEW JERSEY (STATE STANDARDS).

ON THE DAILY CONTRACTOR QUALITY CONTROL REPORT, THE CONTRACTOR SHALL RECORD THE DATES: WHEN THE MAJOR GRADING ACTIVITIES OCCUR (E.G., CLEARING, GRUBBING, EXCAVATION, AND GRADING); WHEN CONSTRUCTION ACTIVITIES TEMPORARILY OR PERMANENTLY CEASE ON A PORTION OF THE SITE; AND WHEN STABILIZATION PRACTICES ARE INITIATED.

SEEDBED PREPARATION:
GRADE AS NEEDED AND FEASIBLE TO PERMIT THE USE OF CONVENTIONAL EQUIPMENT FOR SEEDBED PREPARATION, SEEDING, MULCHING AND MULCH ANCHORING. IMMEDIATELY PRIOR TO SEEDING, THE SURFACE SHALL BE SCARIFIED 6" TO 12" WHERE THERE HAS BEEN SOIL COMPACTION.

WORK LIME AND FERTILIZER INTO THE SOIL AS NEARLY AS PRACTICAL TO A DEPTH OF 4 INCHES WITH A DISC, SPRINGTOOTH HARROW, OR OTHER SUITABLE EQUIPMENT. THE FINAL HARROWING OR DISCING OPERATION SHALL BE ON THE GENERAL CONTOUR. CONTINUE TILLAGE UNTIL A REASONABLE UNIFORM SEEDBED IS PREPARED.

REMOVE FROM THE SURFACE ALL STONES TWO INCHES OR LARGER IN ANY DIMENSION, REMOVE ALL DEBRIS, SUCH AS WIRE, CABLE, TREE ROOTS, PIECES OF CONCRETE, CLODS, LUMPS OR OTHER UNSUITABLE MATERIAL.

APPLY SEED UNIFORMLY BY HAND, CYCLONE (CENTRIFUGAL) SEEDER, DROP SEEDER, DRILL, CULTIPACKER SEEDER, OR HYDROSEEDER. THE LATTER MAY BE JUSTIFIABLE FOR LARGE, STEEP AREAS WHERE CONVENTIONAL VEHICLES CANNOT TRAVEL. MULCH SHALL NOT BE INCLUDED IN THE TANK WITH THE SEED. EXCEPT FOR DRILLED, HYDROSEEDER OR CULTIPACKED SEEDINGS, SEED SHALL BE INCORPORATED INTO THE SOIL TO A DEPTH OF 1/4 TO 1/2 INCH, BY RAKING OR DRAGGING. DEPTH OF SEED PLACEMENT MAY BE 1/4 INCH DEEPER ON COARSE TEXTURED SOIL

MULCHING
MULCHING IS REQUIRED ON ALL SEEDING. MULCH WILL INSURE AGAINST EROSION BEFORE GRASS IS ESTABLISHED AND WILL PROMOTE FASTER AND EARLIER ESTABLISHMENT. (THE EXISTENCE OF VEGETATION SUFFICIENT TO CONTROL SOIL EROSION SHALL BE DEEMED COMPLIANCE WITH THIS MULCHING REQUIREMENT.)
A. MULCH MATERIALS SHOULD BE UNROTTED SMALL GRAIN STRAW, HAY FREE OF SEEDS, OR SALT HAY TO BE APPLIED AT THE RATE OF 1-1/2 TO 2 TONS PER ACRE (70 TO 90 POUNDS PER 1,000 SQUARE FEET), EXCEPT THAT WHERE A CRIMPER IS USED INSTEAD OF A LIQUID MULCHBINDER (TACKIFYING OR ADHESIVE AGENT), THE RATE OF APPLICATION MUST BE DOUBLE THE LOWER RATE. MULCH CHOPPER-BLOWERS MUST NOT GRIND THE MATERIAL.
B. SPREAD UNIFORMLY BY HAND OR MECHANICALLY SO THAT APPROXIMATELY 75% - 95% OF THE SOIL SURFACE WILL BE COVERED. FOR UNIFORM DISTRIBUTION OF HAND-SPREAD MULCH, DIVIDE AREA INTO APPROXIMATELY 1,000 SQUARE FEET SECTION AND DISTRIBUTE 70 - 90 POUNDS WITHIN EACH SECTION.
C. MULCH ANCHORING SHOULD BE ACCOMPLISHED IMMEDIATELY AFTER PLACEMENT TO MINIMIZE LOSS BY WIND OR WATER. THIS MAY BE DONE BY ONE OF THE FOLLOWING METHODS, DEPENDING UPON THE SIZE OF THE AREA, STEEPNESS OF SLOPES, AND COSTS.
1. PEG AND TWINE - DRIVE 8 TO 10 INCH WOODEN PEGS TO WITHIN 2 - 3 INCHES OF THE SOIL SURFACE EVERY 4 FEET IN ALL DIRECTIONS. STAKES MAY BE DRIVEN BEFORE OR AFTER APPLYING MULCH. SECURE MULCH TO SOIL SURFACE BY STRETCHING TWINE BETWEEN PEGS IN A CRISS-CROSS AND A SQUARE PATTERN. SECURE TWINE AROUND EACH PEG WITH TWO OR MORE ROUND TURNS.
2. MULCH NETTINGS - STAPLE PAPER, JUTE, COTTON, OR PLASTIC NETTINGS TO THE SOIL SURFACE. USE A DEGRADABLE NETTING IN AREAS TO BE MOWED.
3. CRIMPER (MULCH ANCHORING TOOL)-A TRACTOR-DRAWN IMPLEMENT, SOMEWHAT LIKE A DISC-HARROW, ESPECIALLY DESIGNED TO PUSH OR CUT SOME OF THE BROADCAST LONG FIBER MULCH 3 - 4 INCHES INTO THE SOIL SO AS TO ANCHOR IT AND LEAVE PART STANDING UPRIGHT. THIS TECHNIQUE IS LIMITED TO AREAS TRAVERSABLE BY A TRACTOR, WHICH MUST OPERATE ON THE CONTOUR OF SLOPES. STRAW MULCH RATE SHALL BE 3 TONS PER ACRE. NO TACKIFYING OR ADHESIVE AGENT IS REQUIRED.
D. WOOD-FIBER OR PAPER-FIBER MULCH AT THE RATE OF 1,500 POUNDS PER ACRE MAY BE APPLIED BY A HYDROSEEDER. USE IS LIMITED TO FLATTER SLOPES AND DURING OPTIMUM SEEDING PERIODS IN SPRING AND FALL.

MAINTAINING PERMANENT VEGETATION:
A PREVENTATIVE MAINTENANCE PROGRAM ANTICIPATES REQUIREMENTS AND ACCOMPLISHES WORK WHEN IT CAN BE DONE WITH LEAST EFFORT AND EXPENSE TO INSURE ADEQUATE VEGETATIVE COVER.

MAINTENANCE SHOULD OCCUR ON A REGULAR BASIS, CONSISTENT WITH FAVORABLE PLANT GROWTH, SOIL, AND CLIMACTIC CONDITIONS. THIS INVOLVES REGULAR SEASONAL WORK FOR MOWING, FERTILIZING, LIMING, WATERING, PRUNING, FIRE CONTROL, WEED AND PEST CONTROL, RESEEDING, AND TIMELY REPAIRS. THE DEGREE OF PREVENTATIVE MAINTENANCE DEPENDS UPON THE CATEGORY OF THE VEGETATION AND LAND; I.E., IMPROVED, SEMI-IMPROVED, AND UNIMPROVED GROUNDS.

A. MOWING IS A RECURRING PRACTICE AND ITS INTENSITY DEPENDS UPON THE FUNCTION OF THE GROUND COVER. ON IMPROVED AREAS, SUCH AS LAWNS, CERTAIN RECREATION FIELDS, AND PICNIC AREAS, MOWING WILL BE FREQUENT. ON SEMI-IMPROVED AREAS, MOWING WILL BE INFREQUENT. UNIMPROVED AREAS MAY BE LEFT UNMOWED TO PERMIT NATURAL SUCCESSION.
B. FERTILIZER SHOULD BE APPLIED AS NEEDED TO MAINTAIN A DENSE STAND OF DESIRABLE SPECIES. FREQUENTLY MOWED AREAS AND THOSE ON SANDY SOILS WILL REQUIRE MORE FERTILIZATION.
C. LIME REQUIREMENT SHOULD BE DETERMINED BY SOIL TESTING EVERY 2 - 3 YEARS. FERTILIZATION INCREASES THE NEED FOR LIMING.

SEQUENCE OF CONSTRUCTION

ALL EARTH DISTURBANCE ACTIVITIES SHALL PROCEED IN ACCORDANCE WITH THE FOLLOWING SEQUENCE. EACH STAGE SHALL BE COMPLETED BEFORE ANY FOLLOWING STAGE IS INITIATED, UNLESS OTHERWISE NOTED. CLEARING SHALL BE LIMITED ONLY TO THOSE AREAS DESCRIBED IN EACH STAGE.

1. CONTRACTOR SHALL OBTAIN "NOTICE TO PROCEED".
2. AT LEAST 7 DAYS BEFORE STARTING ANY EARTH DISTURBANCE ACTIVITIES, THE CONTRACTOR SHALL INVITE ALL CONTRACTORS INVOLVED IN THOSE ACTIVITIES, ALL APPROPRIATE MUNICIPAL OFFICIALS, THE CONTRACTING OFFICER, AND THE MERCER COUNTY SOIL CONSERVATION DISTRICT (MCSCD) TO AN ON-SITE MEETING.
3. AT LEAST 3 DAYS BEFORE STARTING ANY EARTH DISTURBANCE ACTIVITIES, ALL CONTRACTORS INVOLVED IN THOSE ACTIVITIES SHALL NOTIFY THE NEW JERSEY ONE CALL SYSTEM AT 1-800-272-1000 FOR BURIED UTILITIES LOCATIONS.
4. CONTRACTOR SHALL NOTIFY THE MCSCD INSPECTOR 48 HOURS PRIOR TO ANY LAND DISTURBING ACTIVITY.
5. MOBILIZE STAGING AREA AND PROVIDE CONSTRUCTION ENTRANCE(S) AND SILT FENCE.
6. PROTECT EXISTING INLETS WITH INLET PROTECTION UNTIL THEY ARE DEMOLISHED.
7. CLEAR, GRUB, AND GRADE IN AREAS THAT CAN BE COMPLETED WITHOUT DIVERTING STREAMFLOW. ANY AREA WHERE FINAL GRADE IS ACHIEVED SHALL BE STABILIZED USING THE PERMANENT STABILIZATION SPECIFICATIONS.
8. CONSTRUCT UTILITY BRIDGE AND REROUTE UTILITIES.
9. CONSTRUCT FLOW DIVERSION AS SEQUENCED BELOW. MONITOR NATIONAL WEATHER SERVICE STREAMFLOW PREDICTIONS FOR ASSUNPINK CREEK AND DELAWARE RIVER GAGES IN TRENTON, NJ, DAILY TO DETERMINE POTENTIAL FOR COFFER DAM OVERTOPPING. IF COFFER DAM WILL BE OVERTOPPED, THEN EQUIPMENT AND PERSONNEL SHALL BE EVACUATED FROM WORK AREA. ANY WATER PUMPED FROM THE EXCAVATION AREA SHALL BE DIRECTED THROUGH A FILTER BAG ONTO A STABILIZED AREA DOWNSTREAM OF THE WORK AREA.
10. REMOVE CULVERT ROOF PANELS AT THE UPSTREAM AND DOWNSTREAM ENDS OF THE CULVERT WHERE COFFER DAMS ARE REQUIRED TO BLOCK THE STREAMFLOW. BLOCK SOUTHERN CULVERT CHUTE WITH COFFER DAMS AT THE UPSTREAM AND DOWNSTREAM ENDS AND PASS ALL FLOW THROUGH NORTHERN CULVERT CHUTE OR PIPE DIVERSION.
11. DEMOLISH SOUTHERN CHUTE OF CULVERT, CONSTRUCT NECESSARY WALLS, GRADE TO FINAL GRADE, AND STABILIZE.
12. WHEN AREA SOUTH OF CUVLERT IS STABILIZED, REMOVE SOUTHERN COFFER DAMS. BLOCK THE NORTHERN CULVERT CHUTE WITH COFFER DAMS AT THE UPSTREAM AND DOWNSTREAM ENDS AND PASS ALL FLOW THROUGH THE SOUTHERN STABILIZED AREA OR PIPE DIVERSION.
13. DEMOLISH NORTHERN CHUTE OF CULVERT, CONSTRUCT NECESSARY WALLS, GRADE TO FINAL GRADE AND STABILIZE.
14. REMOVE COFFER DAMS AND REPAIR ANY EROSION DAMAGE TO STREAM THAT MAY HAVE OCCURRED DURING CONSTRUCTION.
15. WITH THE PERMISSION OF THE MCSCD AND THE CONTRACTING OFFICER, REMOVE ALL TEMPORARY SEDIMENT AND EROSION CONTROLS.

THIS PROJECT WAS DESIGNED BY THE PHILADELPHIA DISTRICT OF THE U.S. ARMY CORPS OF ENGINEERS. THE INITIALS OR SIGNATURES AND REGISTRATION DESIGNATIONS OF INDIVIDUALS APPEAR ON THESE PROJECT DOCUMENTS WITHIN THE SCOPE OF THEIR EMPLOYMENT AS REQUIRED BY ER 1110-1-8152.

SUBMITTED:
JOSE R. ALVAREZ, P.E.
CHIEF, ENGINEERING BRANCH
APPROVED:
PETER M. TRANCHIK, P.E.
CHIEF, ENGINEERING & CONSTRUCTION DIVISION

US Army Corps of Engineers
Philadelphia District

Mark	Date	Appr.	Description	Mark	Date	Appr.	Description

U.S. ARMY ENGINEER DISTRICT, PHILADELPHIA
CORPS OF ENGINEERS
PHILADELPHIA, PENNSYLVANIA

Designed by: LGB | Date: 06 OCT 2011 | Rev.
Dwn by: --- | Ckd by: --- | IFB W912BU-- XX-A-XXX
Reviewed by: --- | Drawing Status: SUBMITTAL
Submitted by: --- | File name: --- | Plot date: --- | Plot scale: 1" = 1"
Chief, Design Branch

LOWER ASSUNPINK CREEK ECOSYSTEM RESTORATION
MERCER COUNTY, NEW JERSEY
STREAM DAYLIGHTING
EROSION AND SEDIMENT CONTROL PLAN NOTES

Sheet reference number:
G-202
Sheet 5 of 20

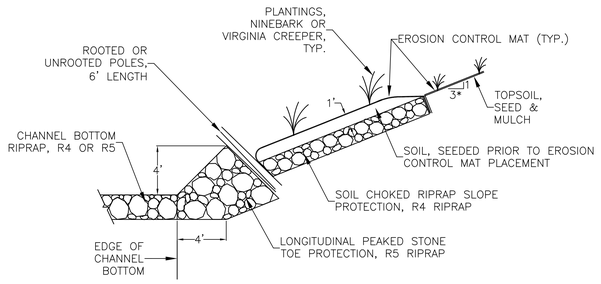

*SLOPE ON RIGHT BANK AS SHOWN, LEFT BANK SLOPE IS 2.5H:1V.

TYPICAL SECTION–SOIL CHOKED RIPRAP SLOPE PROTECTION & LONGITUDINAL PEAKED STONE TOE PROTECTION

N.T.S.

PLANT LIST

KEY	QUAN	BOTANICAL NAME	COMMON NAME	SIZE	ROOT	COMMENTS
TREES						
PO	4	PLATANUS OCCIDENTALIS	SYCAMORE	# – # FT.	B&B	
AS	4	ACER SACCHARINUM	SILVER MAPLE	# – # FT.	B&B	
QR	4	QUERCUS RUBRA	NORTHERN RED OAK	# – # FT.	B&B	
FP	6	ACER SACCHARUM	SUGAR MAPLE	# – # FT.	B&B	
SHRUBS						
PO	200	PHYSOCARPUS OPULIFOLIUS	NINEBARK DIABOLO	# – # IN.	1 GAL POT	
RP	55	RHODODENDRON "PJM"	RHODODENDRON PJM, HYBRID	# – # IN.	1 GAL POT	
VC	200	PARTHENOCISSUS QUINQUEFOLIA	VIRGINIA CREEPER	# – # IN.	CUTTINGS	
POLES						
SN	200	SALIX NIGRA	BLACK WILLOW	# – # IN.	BARE ROOT	
CS	200	CORNUS SERICEA	REDOSIER DOGWOOD	# – # IN.	BARE ROOT	

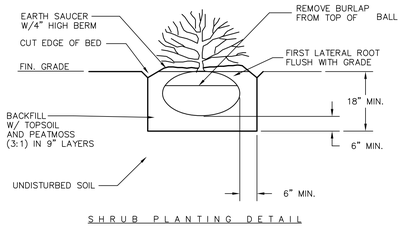

SHRUB PLANTING DETAIL

N.T.S.

PRUNE 1/5 BUT RETAIN NATURAL FORM

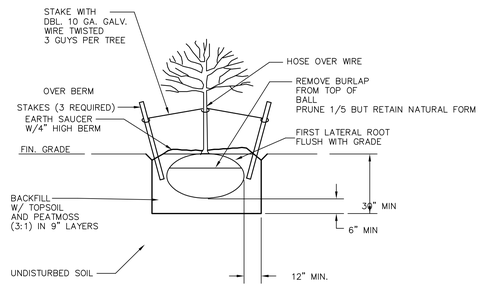

DECIDUOUS TREE PLANTING DETAIL

N.T.S.

US Army Corps of Engineers
Philadelphia District

Mark	Description	Date	Appr.

Mark	Description	Date	Appr.

U.S. ARMY ENGINEER DISTRICT, PHILADELPHIA
CORPS OF ENGINEERS
WANAMAKER BUILDING
PHILADELPHIA, PENNSYLVANIA

Designed by: MKP
Dwn by: MKP
Ckd by: DCL
Reviewed by: TTV, DCL, SWB, JTM
Submitted by: JRA
Chief, Design Branch
Date: 06 OCT 2011
Rev:
IFB W912BU-XX-X-XXX
Drawing Code: 100% SUBMITTAL
File name: 1-Grng
Plot date: –
Plot scale: 1" = 1"

LOWER ASSUNPINK CREEK ECOSYSTEM RESTORATION
MERCER COUNTY, NEW JERSEY
STREAM DAYLIGHTING

PLANTING PLAN, SLOPE PROTECTION & DETAILS

Sheet reference number:
L–100
Sheet 6 of 20

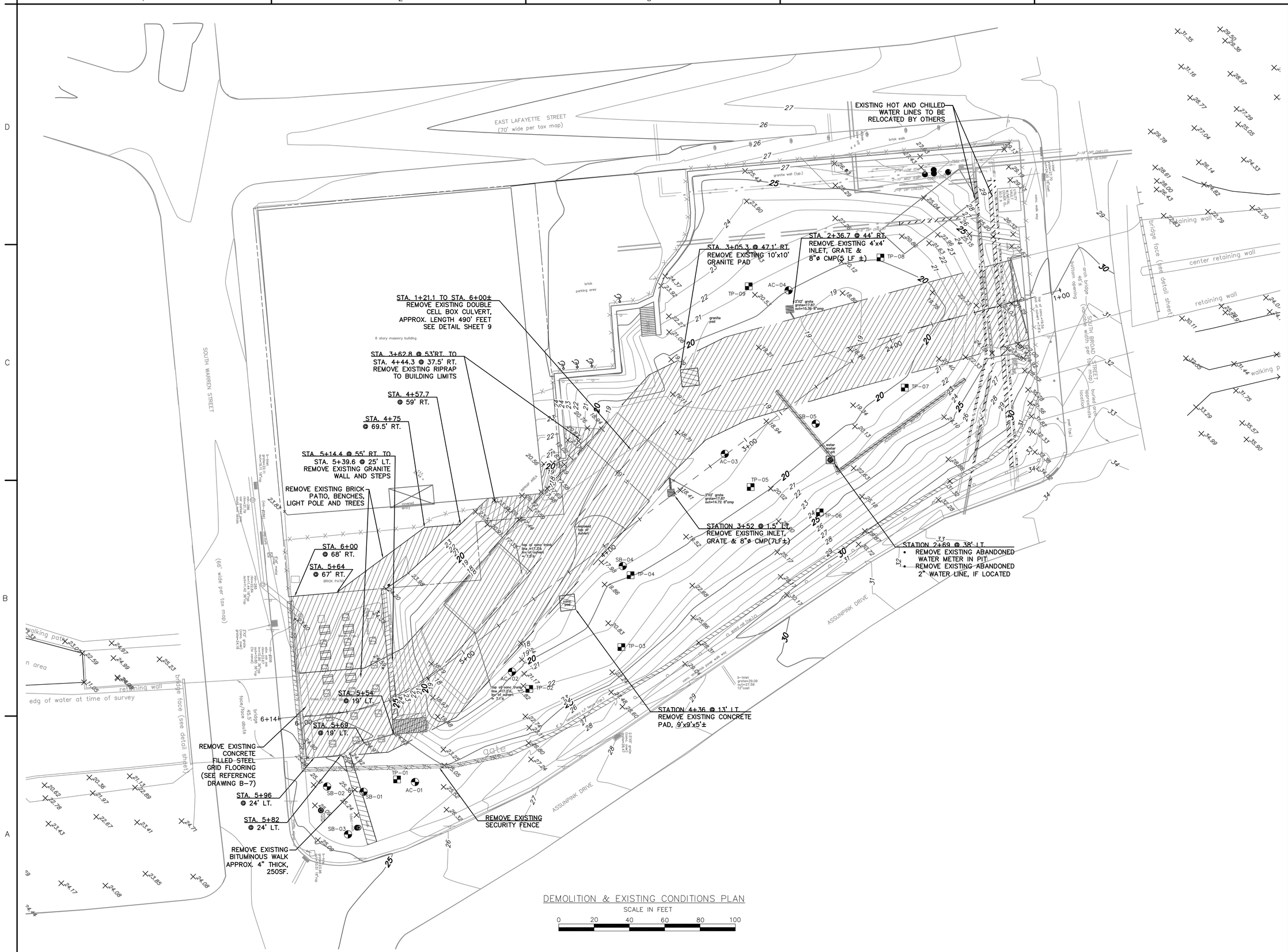

DEMOLITION & EXISTING CONDITIONS PLAN

SCALE IN FEET

0 20 40 60 80 100

US Army Corps of Engineers
Philadelphia District

Mark	Description	Date	Appr.

U.S. ARMY ENGINEER DISTRICT, PHILADELPHIA
CONTRACT DIVISION, DESIGN SECTION
PHILADELPHIA, PENNSYLVANIA

Designed by: MKP		Date: 06 OCT 2011
Dwn by: MKP	Ckd by: DCL	Rev.
Reviewed by: DCL		IFB W912BU-XX-X-XXX
Submitted by: JRA Chief, Design Branch		Drawing Code: AXX-XXXXX-XXXX

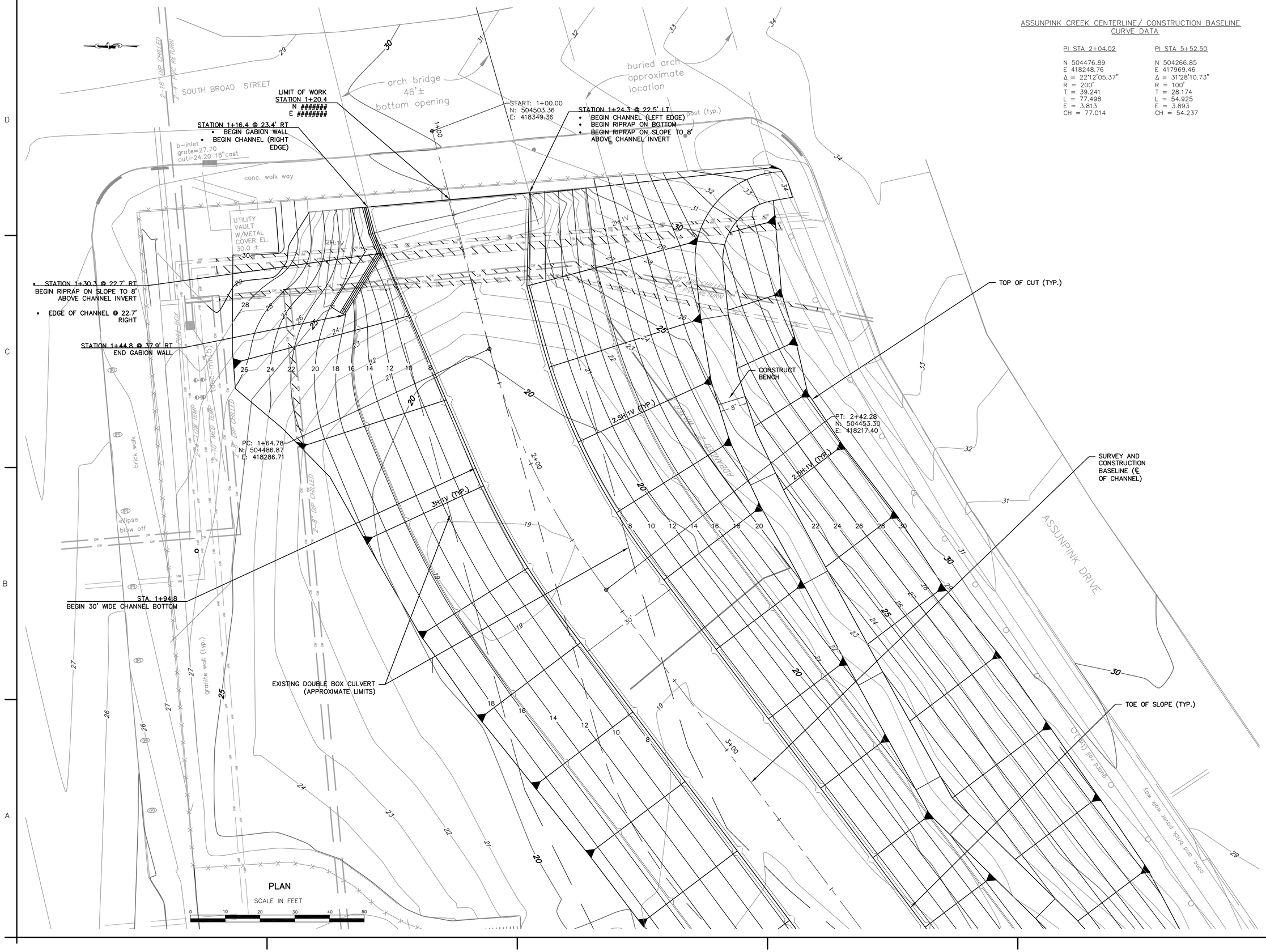

ASSUNPINK CREEK CENTERLINE/ CONSTRUCTION BASELINE CURVE DATA

PI STA 2+04.02	PI STA 5+52.50
N 504476.89	N 504266.85
E 418248.76	E 417969.46
Δ = 22°12'05.37"	Δ = 31°28'10.73"
R = 200'	R = 100'
T = 39.241	T = 28.174
L = 77.498	L = 54.925
E = 3.813	E = 3.893
CH = 77.014	CH = 54.237

US Army Corps of Engineers
Philadelphia District

Mark	Description	Date	Appr.

Mark	Description	Date	Appr.

U.S. ARMY ENGINEER DISTRICT, PHILADELPHIA
CORPS OF ENGINEERS
PHILADELPHIA, PENNSYLVANIA

Designed by: MKP
Dwn by: MKP
Ckd by: DCL
Reviewed by: TPW
Submitted by: JRA
Chief, Design Branch
Date: 06 OCT 2011
Rev.
IFB W912BU-XX-X-XXX
Drawing Code: TYPE 3 SUBMITTAL
File name:*.dwg
Plot date: ~ "
Plot scale:1" = 1"

LOWER ASSUNPINK CREEK ECOSYSTEM RESTORATION
MERCER COUNTY, NEW JERSEY
STREAM DAYLIGHTING
PLAN – STATION 1+00 TO STATION 3+64.3

Sheet reference number:
C–101
Sheet 8 of 20

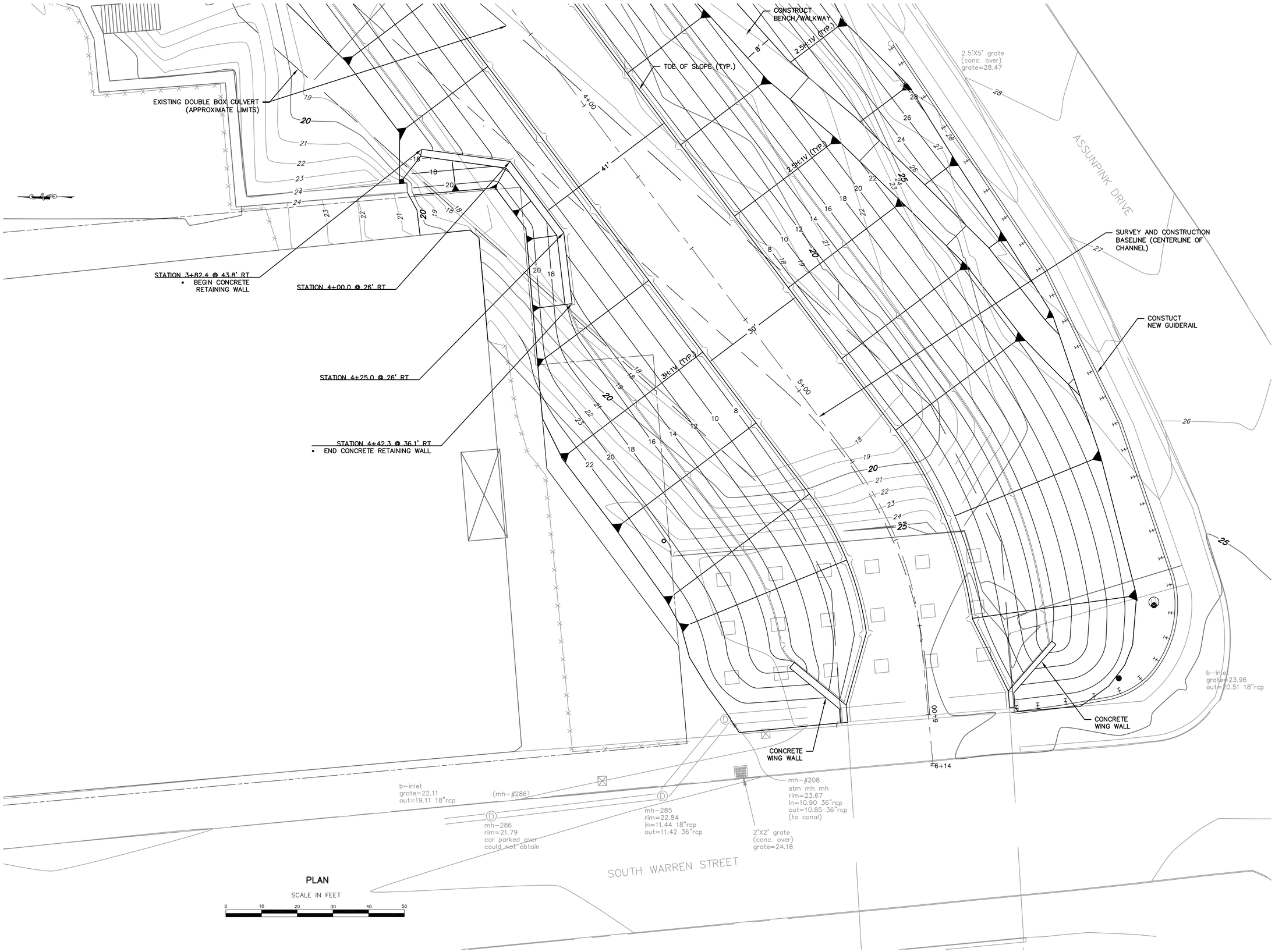

US Army Corps of Engineers
Philadelphia District

Mark	Description	Date	Appr.	Mark	Description	Date	Appr.

U.S. ARMY ENGINEER DISTRICT, PHILADELPHIA
CORPS OF ENGINEERS
PHILADELPHIA, PENNSYLVANIA

Designed by: MKP
Dwn by: MKP
Ckd by: DCL
Reviewed by: TWH
Submitted by: JRA
Chief, Design Branch
Date: 06 OCT 2011
IFB W912BU-XX-X-XXX
Drawing Code: PRA, SHEETAL
File name: *.dwg
Plot date: "
Plot scale: 1" = 1"
Rev.

LOWER ASSUNPINK CREEK, ECOSYSTEM RESTORATION
MERCER COUNTY, NEW JERSEY
STREAM DAYLIGHTING
PLAN – STATION 3+64.3 TO STATION 6+14

Sheet reference number:
C–102
Sheet 9 of 20

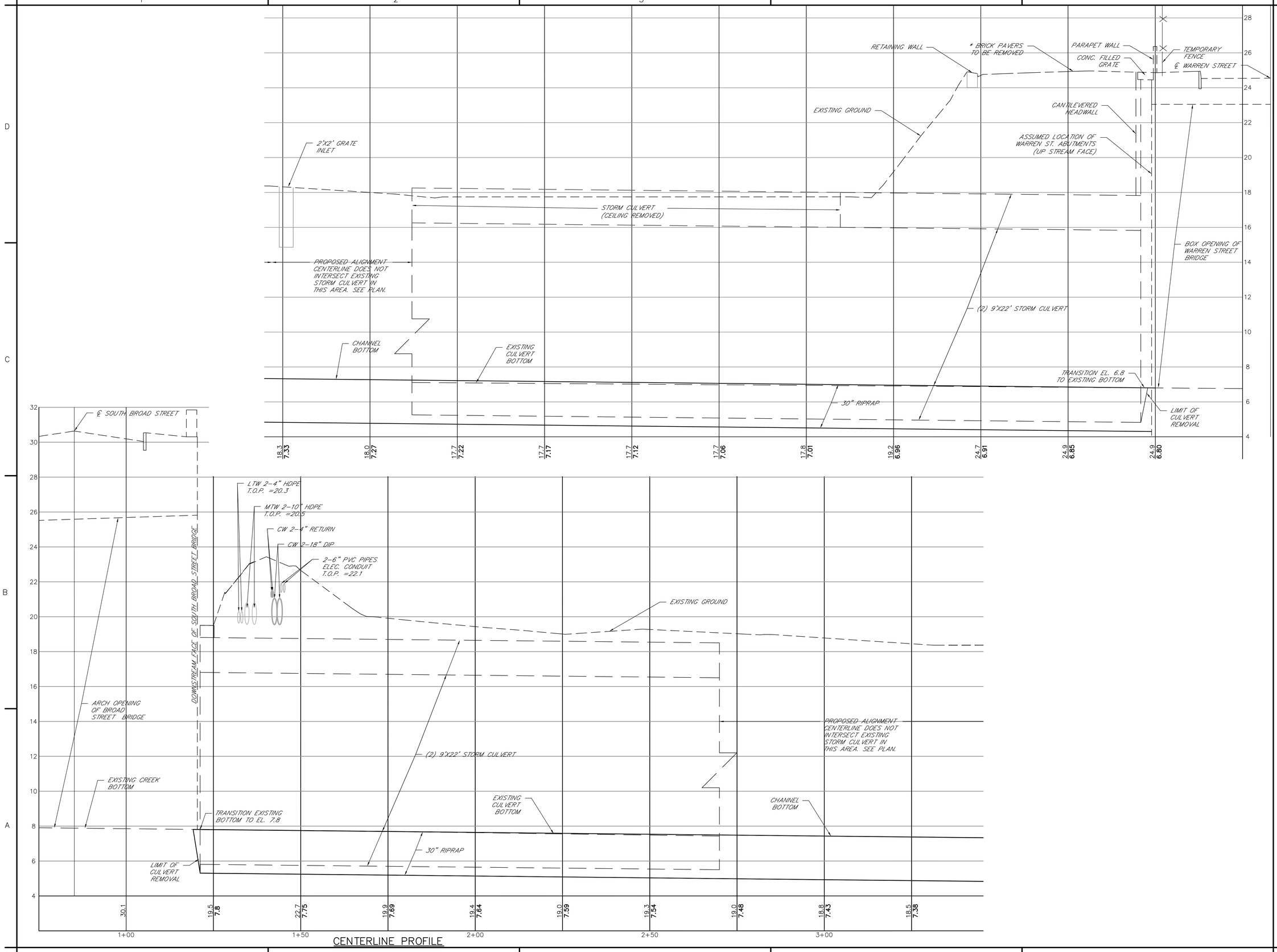

CENTERLINE PROFILE

US Army Corps of Engineers
Philadelphia District

Mark	Description	Date	Appr.

Mark	Description	Date	Appr.

U.S. ARMY ENGINEER DISTRICT, PHILADELPHIA
CORPS OF ENGINEERS
PHILADELPHIA, PENNSYLVANIA

Designed by: MKP
Dwn by: MKP
Ckd by: DCL
Reviewed by: TEH
Submitted by: JRA
Chief, Design Branch
Date: 06 Oct 2011
Rev.
IFB W912BU-- XX-X-XXX
Drawing Code: DAA-SUBMITTAL
File name: *.dwg
Plot date: --
Plot scale: 1" = 1"

LOWER ASSUNPINK CREEK ECOSYSTEM RESTORATION
MERCER COUNTY, NEW JERSEY
STREAM DAYLIGHTING

CENTERLINE PROFILE – STATION 1+00 TO STATION 6+14

Sheet reference number:
C-200
Sheet 10 of 20

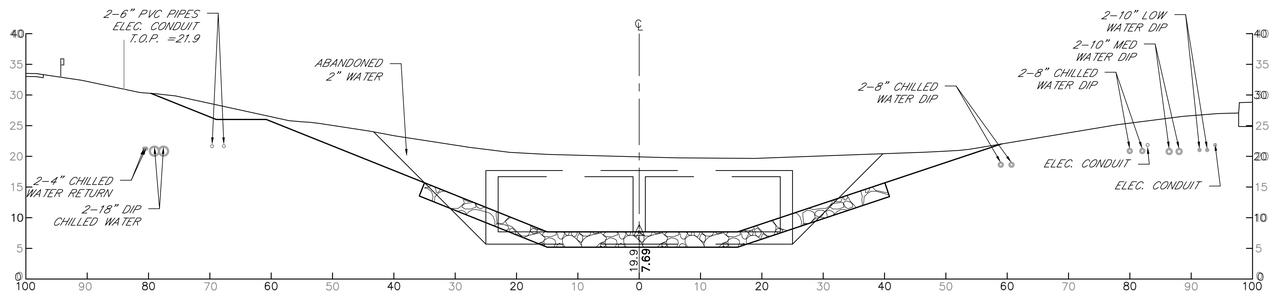

STATION 1+75

sta 1+75

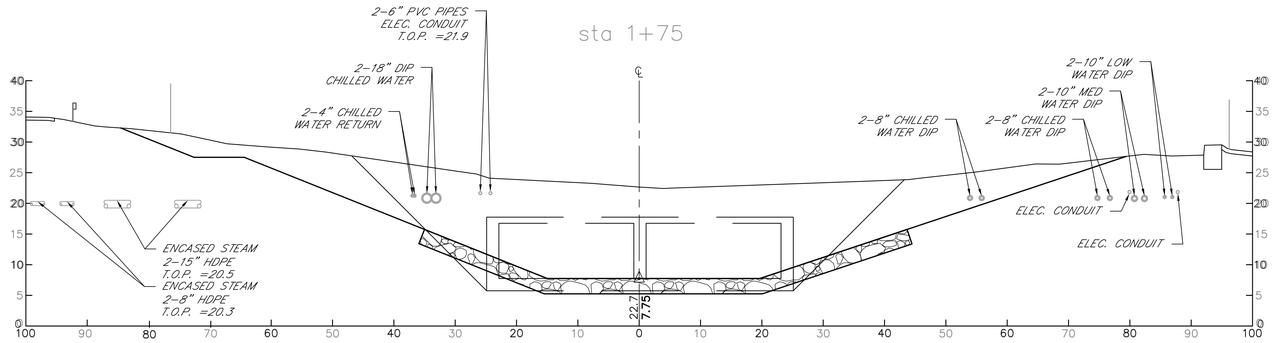

STATION 1+50

sta 1+50

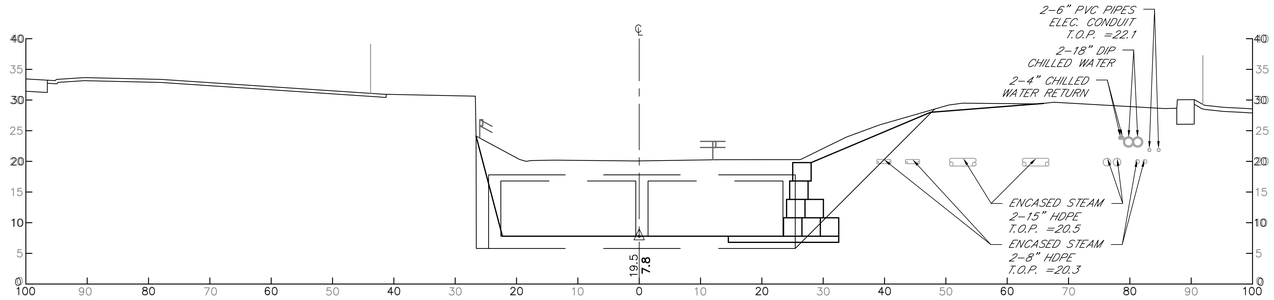

STATION 1+25

sta 1+25

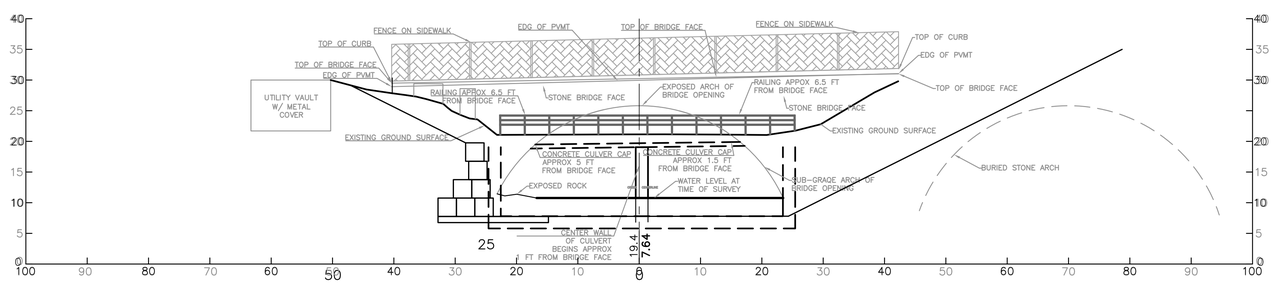

BROAD STREET BRIDGE DS FACE

US Army Corps of Engineers
Philadelphia District

Mark	Description	Date	Appr.

Mark	Description	Date	Appr.

U.S. ARMY ENGINEER DISTRICT, PHILADELPHIA
CORPS OF ENGINEERS
PHILADELPHIA, PENNSYLVANIA

Designed by: MKP
Dwn by: MKP
Ckd by: DCL
Reviewed by: TH
Submitted by: JRA
Chief, Design Branch
Date: 06 OCT 2011
Rev:
FFB W912BU-XX-X-XXX
Drawing Code: AFS, SHEETAL
File name: *.dwg
Plot date: "
Plot scale: 1" = 1"

LOWER ASSUNPINK CREEK, ECOSYSTEM RESTORATION
MERCER COUNTY, NEW JERSEY
STREAM DAYLIGHTING
CROSS SECTIONS – DS FACE OF BROAD STREET BRIDGE TO STA. 1+75

Sheet reference number:
C-300
Sheet 11 of 22

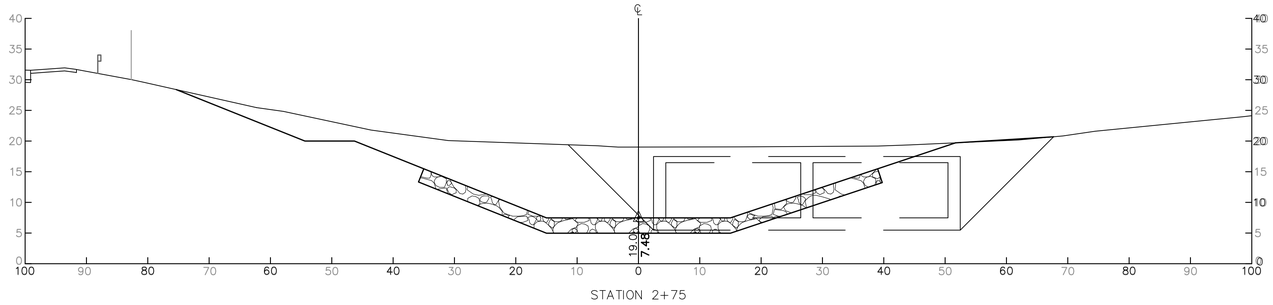

STATION 2+75

sta 2+75

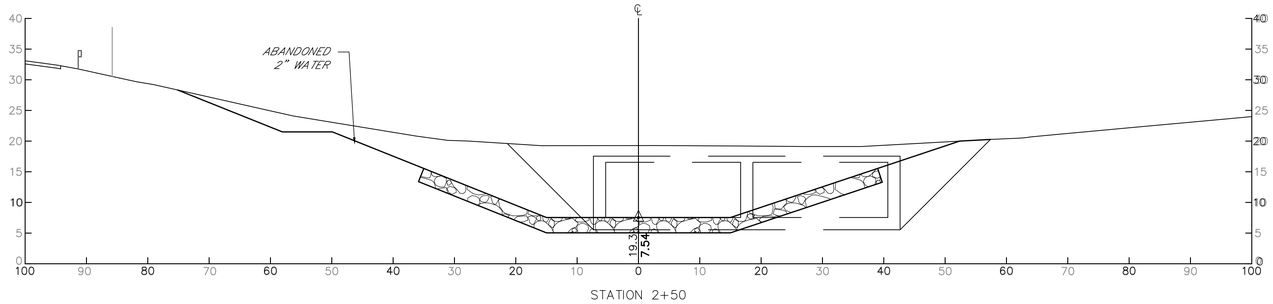

STATION 2+50

sta 2+50

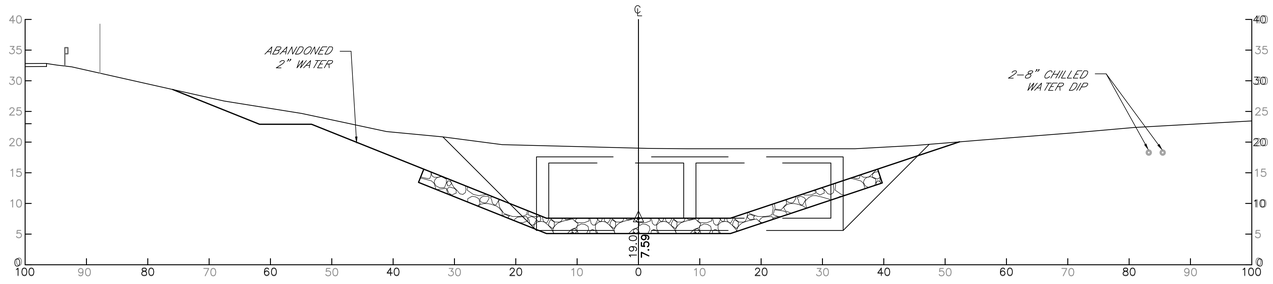

STATION 2+25

sta 2+25

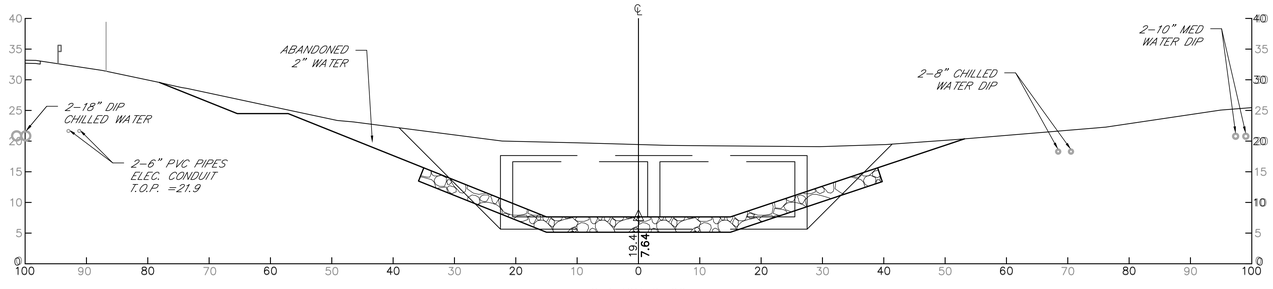

STATION 2+00

sta 2+00

US Army Corps of Engineers
Philadelphia District

Mark	Description	Date	Appr.

Mark	Description	Date	Appr.

U.S. ARMY ENGINEER DISTRICT, PHILADELPHIA
CORPS OF ENGINEERS
PHILADELPHIA, PENNSYLVANIA

Designed by: MKP
Dwn by: MKP
Ckd by: DCL
Reviewed by: TEH
Submitted by: JRA
Chief, Design Branch
Date: 06 OCT 2011
Rev.
IFB W912BU-XX-X-XXX
Drawing Code: XXX-XXX-XXXX-XXXX

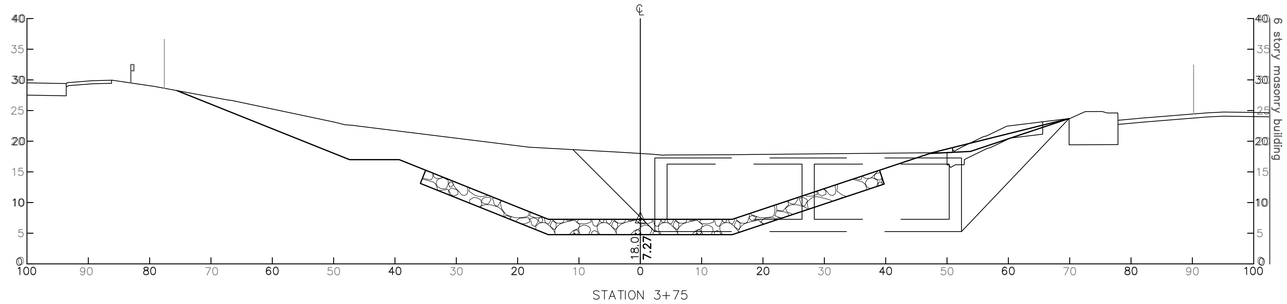

sta 3+75

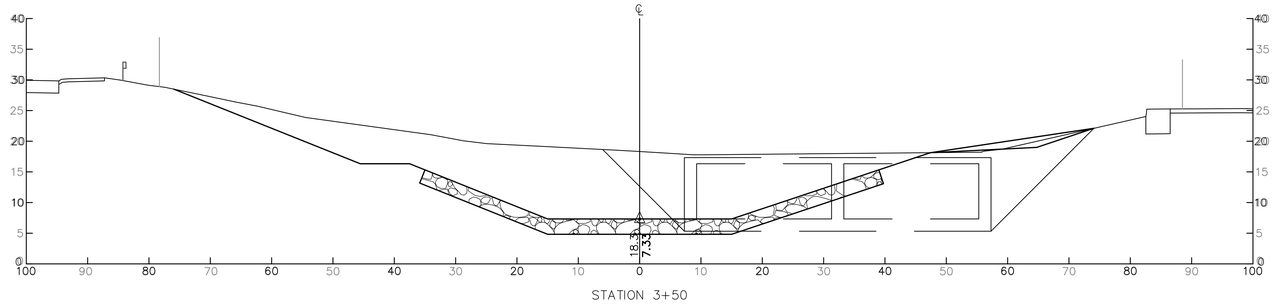

sta 3+50

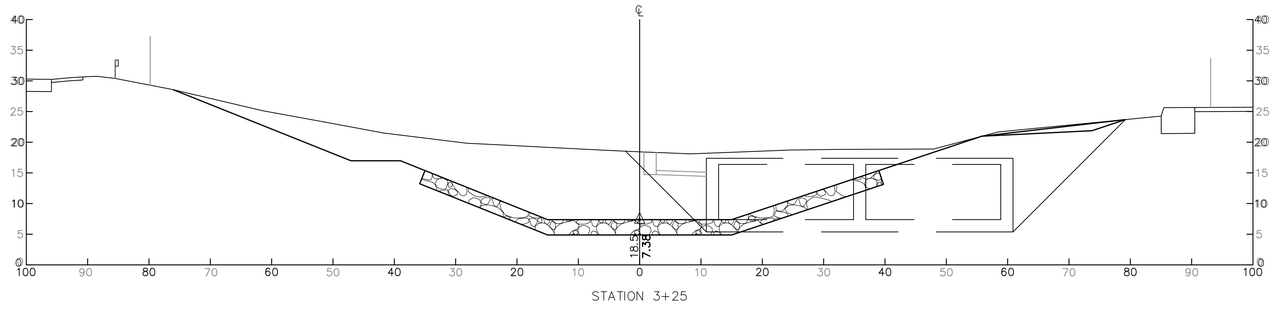

sta 3+25

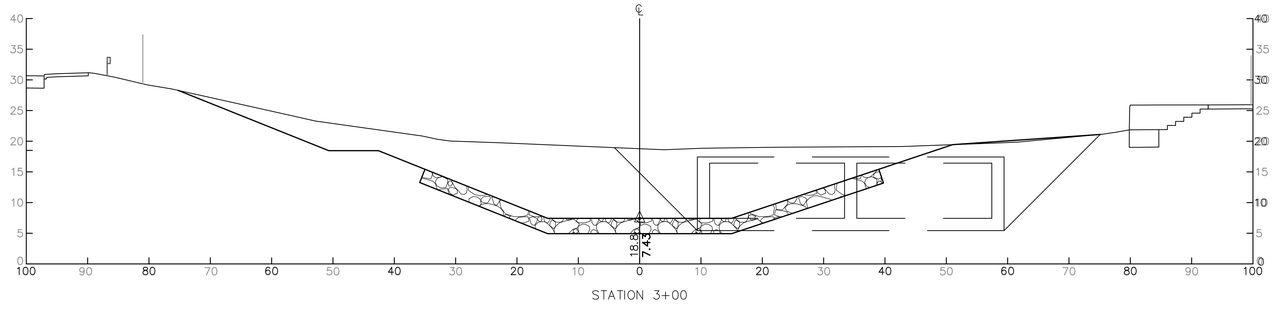

sta 3+00

US Army Corps of Engineers
Philadelphia District

Mark	Description	Date	Appr.

Mark	Description	Date	Appr.

U.S. ARMY ENGINEER DISTRICT, PHILADELPHIA
DELAWARE RIVER BASIN
PHILADELPHIA, PENNSYLVANIA

Designed by: MKP
Dwn by: MKP
Ckd by: DCL
Reviewed by: TPW
Submitted by: JRA
Chief, Design Branch

Date: 06 OCT 2011
Rev.
IFB W912BU-XX-X-XXX
Drawing Code: DWG-SUBMITTAL
File name: *.dwg
Plot date: ~ "
Plot scale: 1" = 1"

LOWER ASSUNPINK CREEK ECOSYSTEM RESTORATION
MERCER COUNTY, NEW JERSEY
STREAM DAYLIGHTING

CROSS SECTIONS – STA. 3+00 TO STA. 3+75

Sheet reference number:
C–302
Sheet 13 of 22

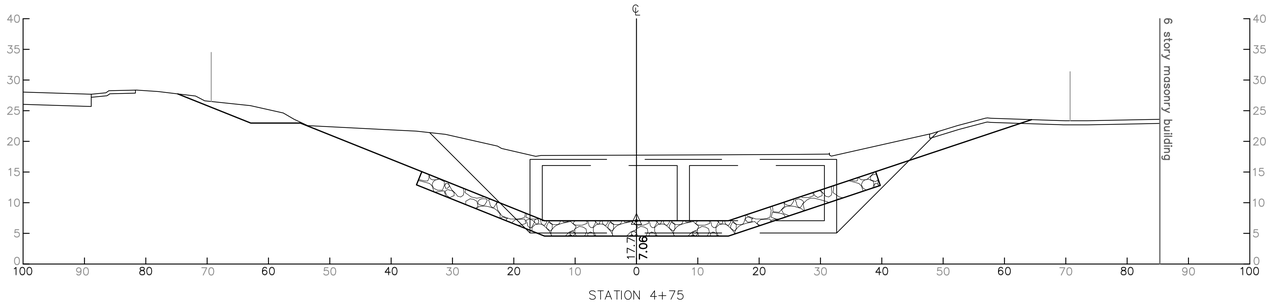

sta 4+75

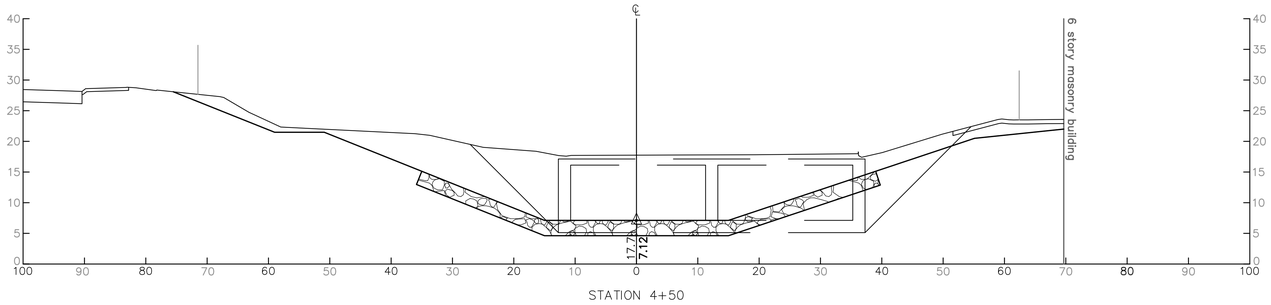

sta 4+50

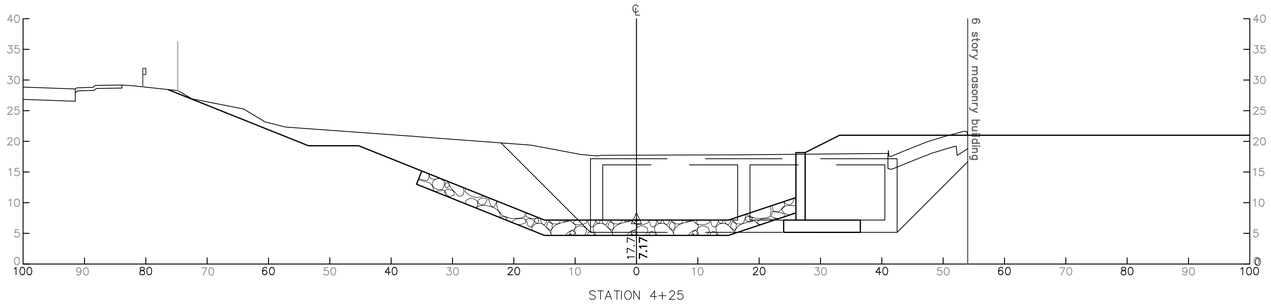

sta 4+25

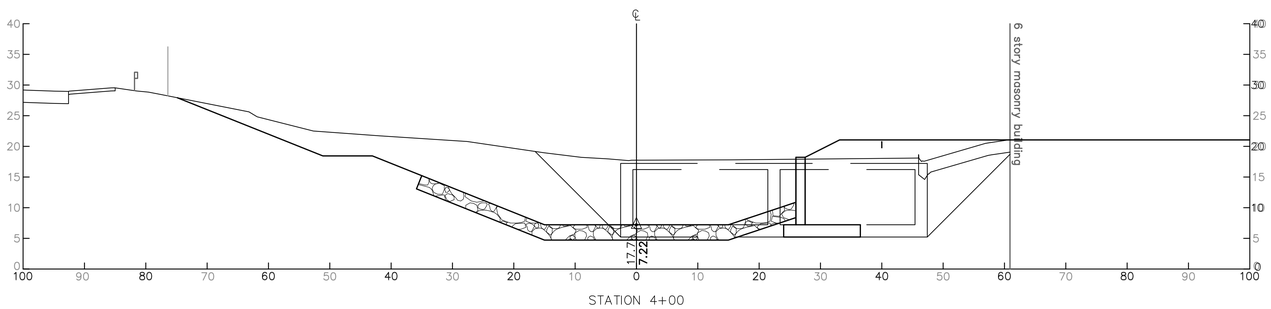

sta 4+00

US Army Corps of Engineers
Philadelphia District

Mark	Description	Date	Appr.

Mark	Description	Date	Appr.

U.S. ARMY ENGINEER DISTRICT, PHILADELPHIA
CORPS OF ENGINEERS
PHILADELPHIA, PENNSYLVANIA

Designed by: MKP
Dwn by: MKP
Ckd by: DCL
Reviewed by: TBrown
Submitted by: JRA
Chief, Design Branch
Date: 06 OCT 2011
Rev:
FFB W912BU-XX-X-XXX
Drawing Code: WRK, SHEETAL
File name: *.dwg
Plot date: "
Plot scale: 1" = 1"

LOWER ASSUNPINK CREEK, ECOSYSTEM RESTORATION
MERCER COUNTY, NEW JERSEY
STREAM DAYLIGHTING
CROSS SECTIONS – STA. 4+00 TO STA. 4+75

Sheet reference number:
C-303
Sheet 14 of 22

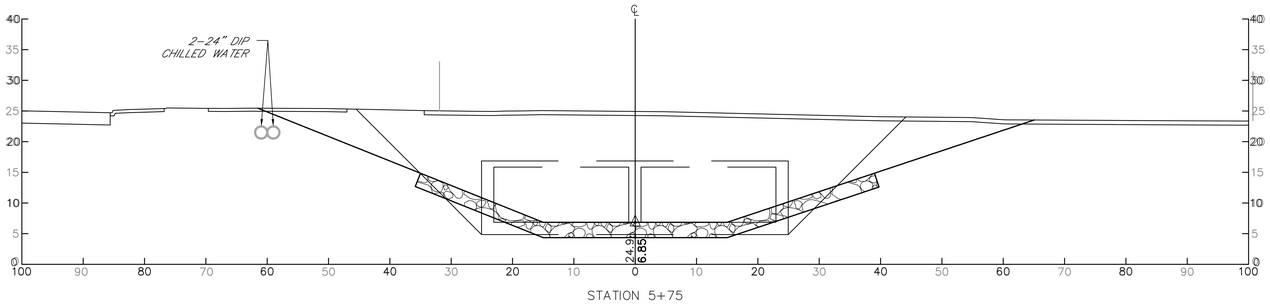

STATION 5+75

sta 5+75

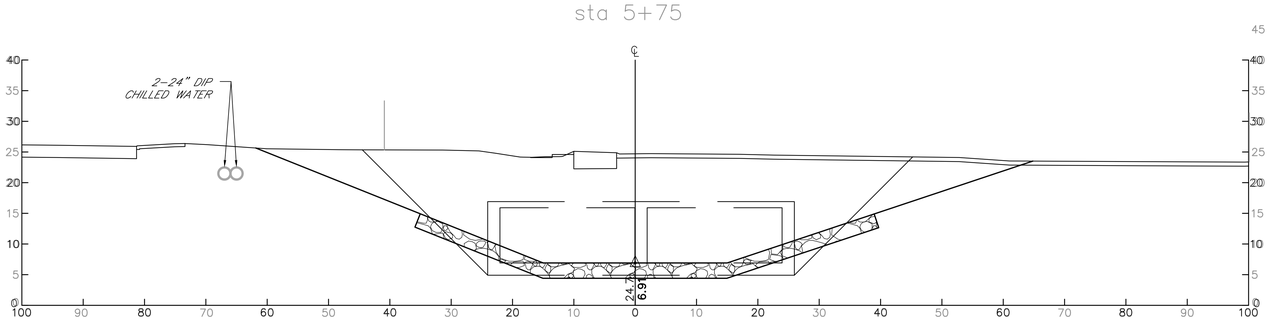

STATION 5+50

sta 5+50

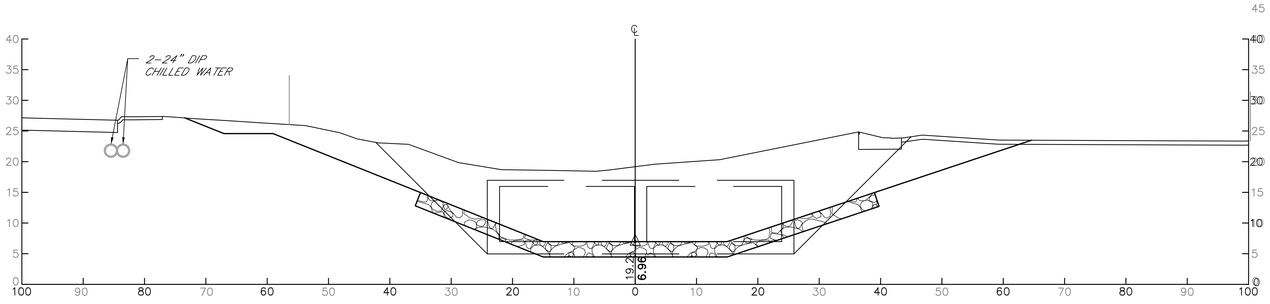

STATION 5+25

sta 5+25

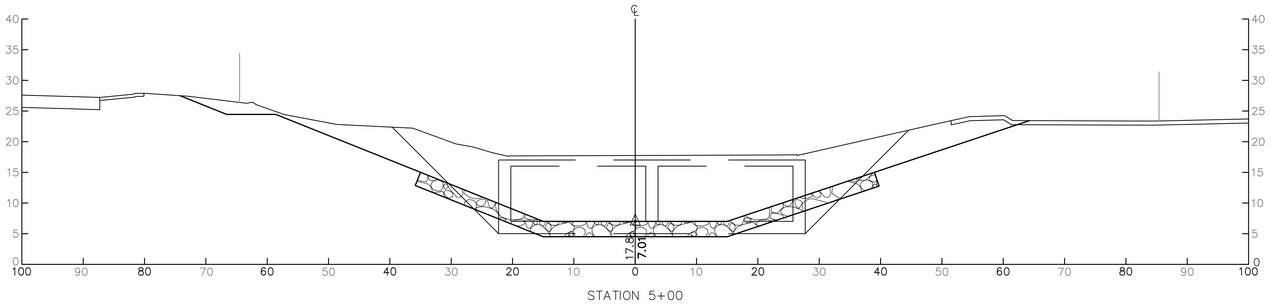

STATION 5+00

sta 5+00

US Army Corps of Engineers
Philadelphia District

Mark	Description	Date	Appr.

Mark	Description	Date	Appr.

U.S. ARMY ENGINEER DISTRICT, PHILADELPHIA
CORPS OF ENGINEERS
PHILADELPHIA, PENNSYLVANIA

Designed by: MKP
Dwn by: MKP
Ckd by: DCL
Reviewed by: JRA
Submitted by: JRA
Chief, Design Branch

Date: 06 OCT 2011
Rev.
IFB W912BU-XX-X-XXX
Drawing Code: PIR-SHEET-AL
File name: *.dwg
Plot date: --
Plot scale: 1" = 1"

LOWER ASSUNPINK CREEK ECOSYSTEM RESTORATION
MERCER COUNTY, NEW JERSEY
STREAM DAYLIGHTING

CROSS SECTIONS – STA. 5+00 TO STA. 5+75

Sheet reference number:
C-304
Sheet 15 of 22

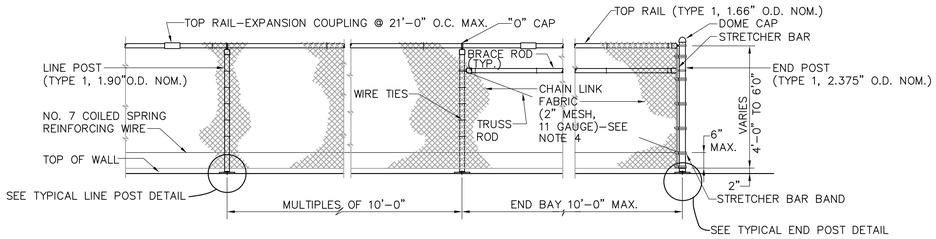

TYPICAL ELEVATION – CHAIN LINK FENCE

NOT TO SCALE

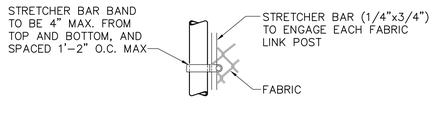

DETAIL – END OR GATE POST

NOT TO SCALE

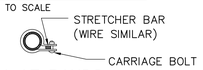

PLAN AT BANDS

NOT TO SCALE

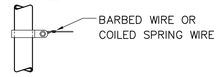

BAND FOR WIRE STRETCHING–FOR TUBULAR POST

NOT TO SCALE

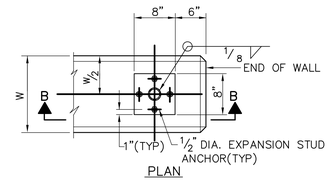

PLAN

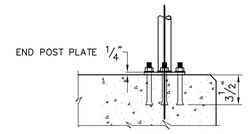

SECTION B–B

TYPICAL DETAIL–END POST ON WALL

NOT TO SCALE

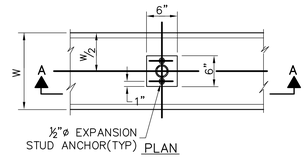

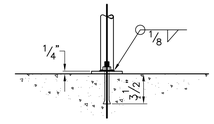

SECTION A–A

TYPICAL DETAIL–LINE POST ON WALL

NOT TO SCALE

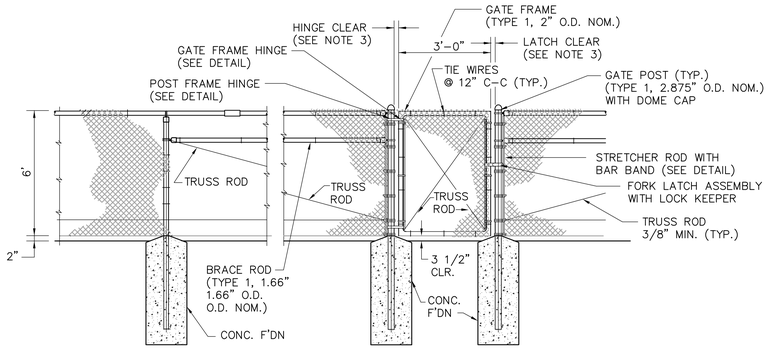

TYPICAL ELEVATION – SINGLE SWING GATE

NOT TO SCALE

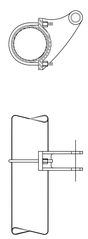

POST HINGE

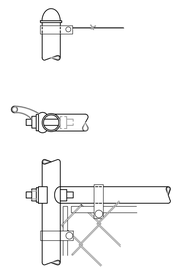

GATE FRAME HINGE

SWING GATE DETAILS

NOT TO SCALE

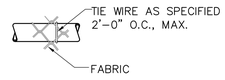

WIRE TIE FOR TOP RAIL

NOT TO SCALE

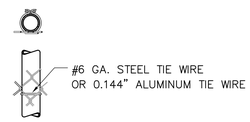

POST OR GATE FRAME ATTACHMENT

NOT TO SCALE

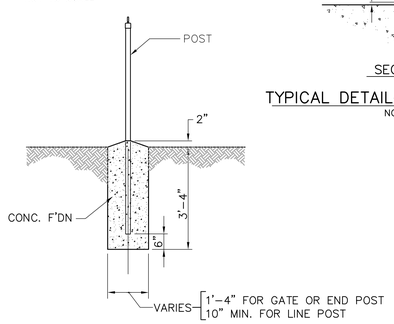

TYPICAL DETAIL– POST FOUNDATION IN EARTH

NOT TO SCALE

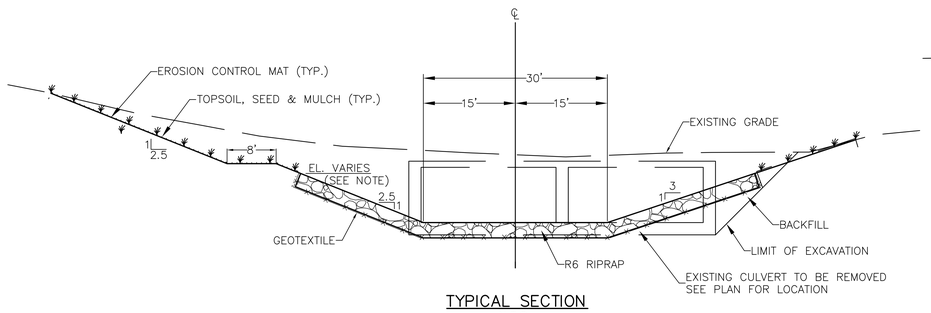

TYPICAL SECTION

N.T.S.

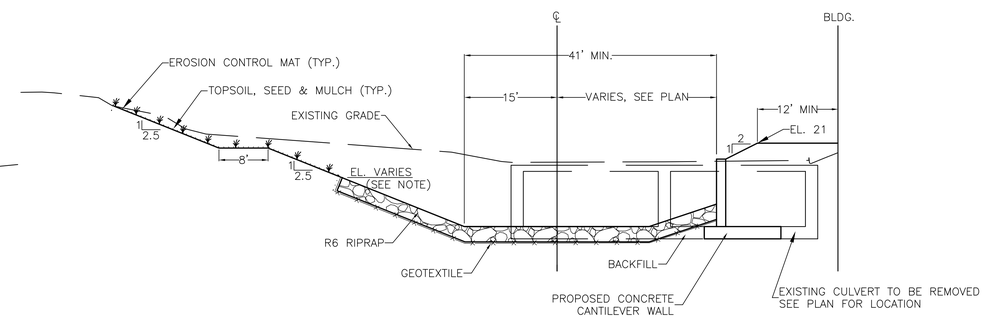

TYPICAL SECTION @ WALL

N.T.S.

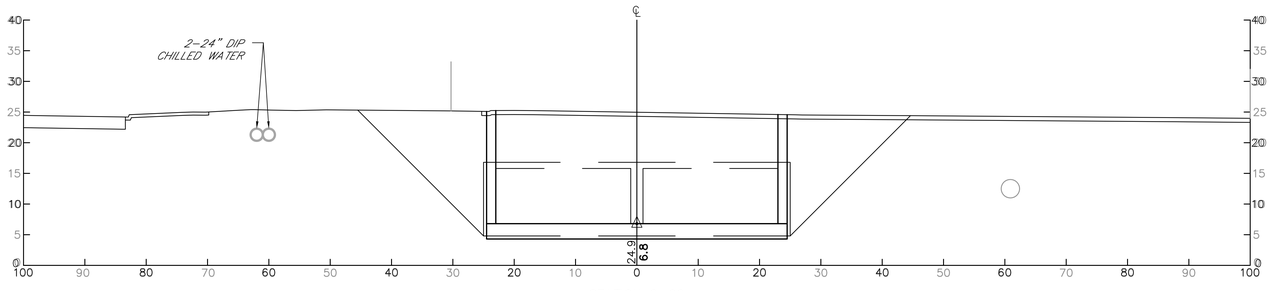

STATION 6+00

sta 6+00

US Army Corps of Engineers
Philadelphia District

Mark	Description	Date	Appr.	Mark	Description	Date	Appr.

U.S. ARMY ENGINEER DISTRICT, PHILADELPHIA
CORPS OF ENGINEERS
PHILADELPHIA, PENNSYLVANIA

Designed by: MKP
Dwn by: MKP
Ckd by: DCL
Reviewed by: TLH
Submitted by: JRA
Chief, Design Branch
Date: 06 OCT 2011
Rev.
IFB W912BU–XX–X–XXX
Drawing Code: AES SUBMITTAL
File name: *.dwg
Plot date: ~
Plot scale: 1" = 1"

LOWER ASSUNPINK CREEK, ECOSYSTEM RESTORATION
MERCER COUNTY, NEW JERSEY
STREAM DAYLIGHTING

CROSS SECTIONS – STA. 6+00,
TYPICAL SECTIONS & FENCE DETAILS

Sheet reference number:
C–305
Sheet 16 of 20

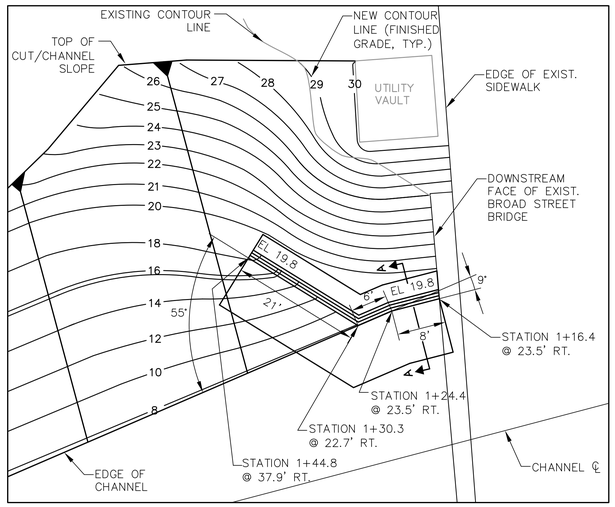

PLAN – GABION WALL TIE–IN @ DOWNSTREAM FACE OF BROAD STREET BRIDGE

SCALE IN FEET

HORIZONTAL 10 0 10 20

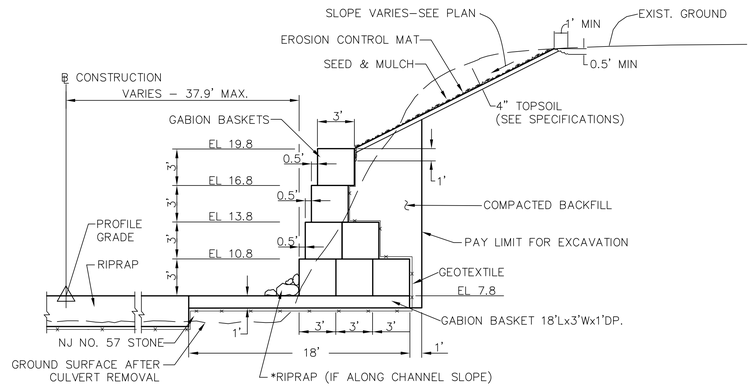

SECTION A–A

NTS

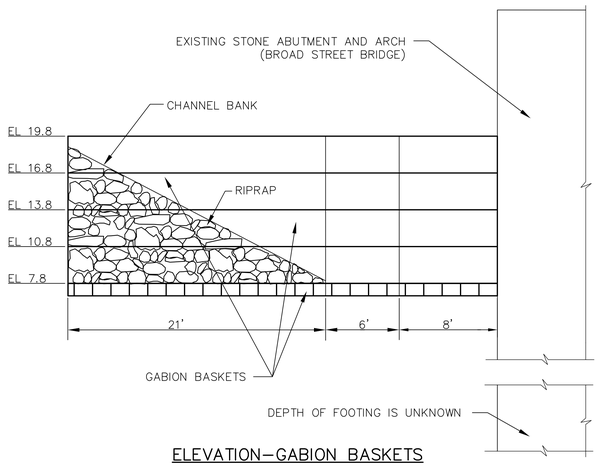

ELEVATION–GABION BASKETS

SCALE IN FEET

5 0 5 10

US Army Corps of Engineers
Philadelphia District

Mark	Description	Date	Appr.

Mark	Description	Date	Appr.

U.S. ARMY ENGINEER DISTRICT, PHILADELPHIA
CORPS OF ENGINEERS
PHILADELPHIA, PENNSYLVANIA

Designed by: MKP
Dwn by: MKP
Ckd by: CKD_BY
Reviewed by: TBYRD
Submitted by: JRA
Chief, Design Branch
Date: 06 OCT 2011
Rev: 9/05
IFB W912BU–
Drawing Code: ARY_W912BU–
File name:
Plot date: –
Plot scale: 1" = 1"

LOWER ASSUNPINK CREEK, ECOSYSTEM RESTORATION
MERCER COUNTY, NEW JERSEY
STREAM DAYLIGHTING

GABION DETAILS

Sheet reference number:
C–400
Sheet 17 of 20

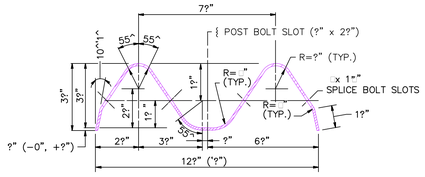

RAIL ELEMENT SHALL BE SUPPLIED IN LENGTHS OF 13'- 6" OR 26'- 0"

W-BEAM RAIL ELEMENT

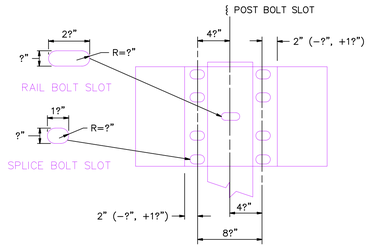

RAIL SPLICE

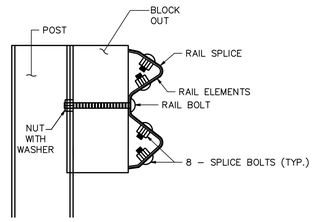

BEAM GUIDE RAIL POST ASSEMBLY

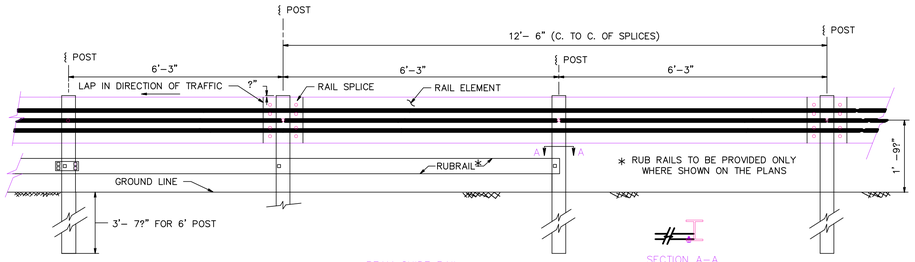

BEAM GUIDE RAIL

SECTION A-A

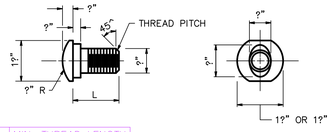

TYPE	L	MIN. THREAD LENGTH
SPLICE	1?"	FULL LENGTH THREAD
RAIL	9?"	1?"

5/8" DIA. BUTTON HEAD BOLT

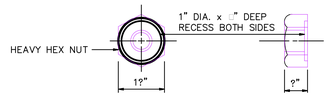

5/8" DIA. RECESS NUT

SPLICE & RAIL NUT & BOLT

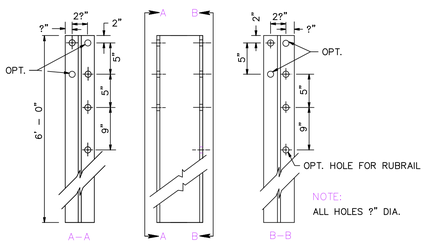

NOTE:
ALL HOLES ?" DIA.

6" x 4" Steel I, 8.5# or 9# per FOOT

6' POST

NOTE:

DIMENSIONS SHOWN MAY VARY FOR RECYCLED/SYNTHETIC BLOCK OUTS.

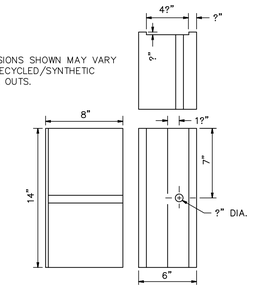

APPROVED RECYCLED/ SYNTHETIC MATERIALS

14" BLOCK OUT

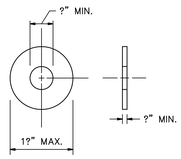

STEEL WASHER

GUIDE RAIL NOTES:

1. ALL DIMENSIONS ARE SUBJECT TO MANUFACTURING TOLERANCES.
2. RAIL ELEMENTS SHALL BE FURNISHED SHOPCURVED, CONCAVE OR CONVEX, FOR RADII BETWEEN 20 AND 150 FEET.
3. THE STEEL FOR RAIL ELEMENTS AND BOLTS SHALL CONFORM TO NJDOT STANDARD SPECIFICATIONS AND ITS AMENDMENTS.

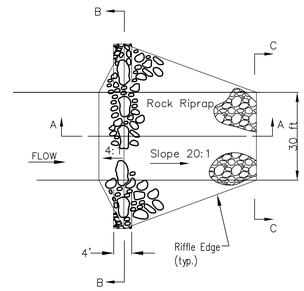

PLAN

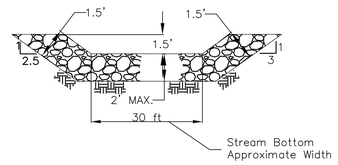

SECTION C-C

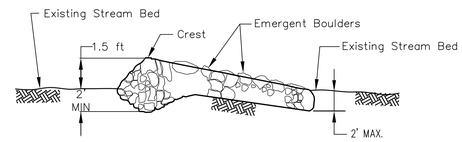

SECTION A-A

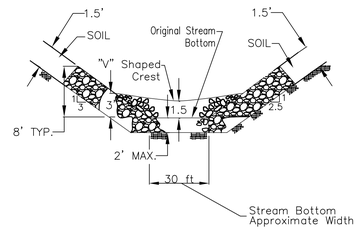

SECTION B-B

DETAILS - ROCK RIFFLE

N.T.S.

NOTES:

1. Use largest individual stones from available material as shown for the emergent boulders and crest stone.
2. Riffle slope shall be 20:1 or flatter where fish passage is required.
3. Rock riffles shall be contructed with the centerline of their crests located at Station 3+00 and Station 4+75.

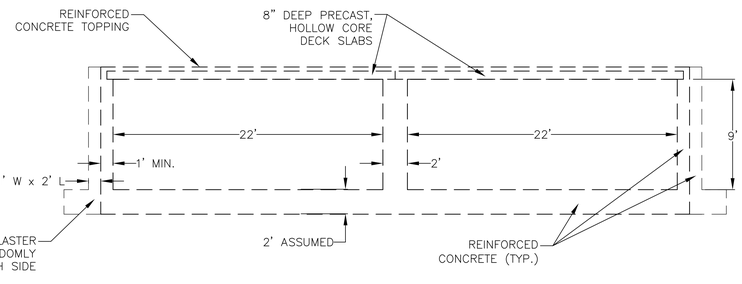

TYPICAL SECTION - EXISTING CULVERT

N.T.S.

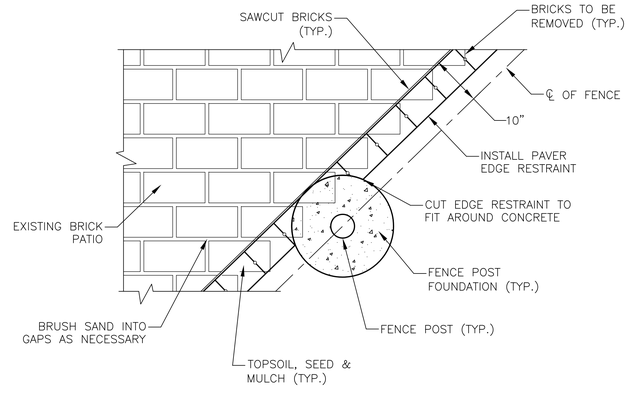

DETAIL - PATIO EDGE

N.T.S.

US Army Corps of Engineers
Philadelphia District

Mark	Description	Date	Appr.	Mark	Description	Date	Appr.

U.S. ARMY ENGINEER DISTRICT, PHILADELPHIA
CORPS OF ENGINEERS
PHILADELPHIA, PENNSYLVANIA

Designed by: MKP
Dwn by: MKP
Ckd by: CKO_JBY
Reviewed by: RDV
Submitted by: JSA
Chief, Design Branch
Date: 06 OCT 2011
Rev. 9/05
IFB W912BU-
Drawing Code: AFS1 - FACT2BU-
File name: -
Plot date: -
Plot scale: 1" = 1"

LOWER ASSUNPINK CREEK ECOSYSTEM RESTORATION
MERCER COUNTY, NEW JERSEY
STREAM DAYLIGHTING
MISCELLANEOUS DETAILS

Sheet reference number:
C-401
Sheet 18 of 20

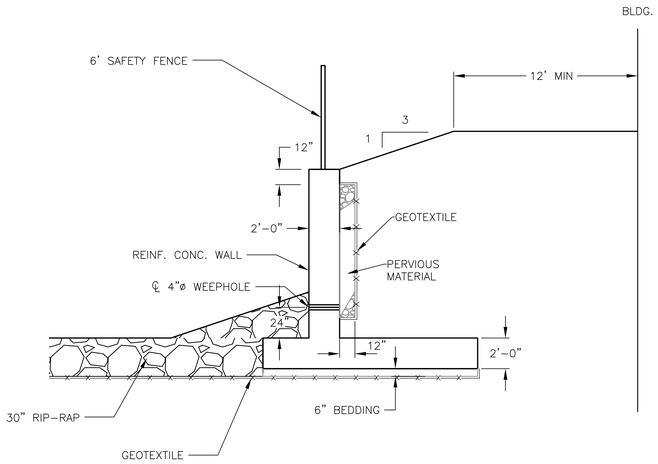

1 / 000000 CHANNEL SECTION @ WALL STATION 4+00 TO STATION 4+25

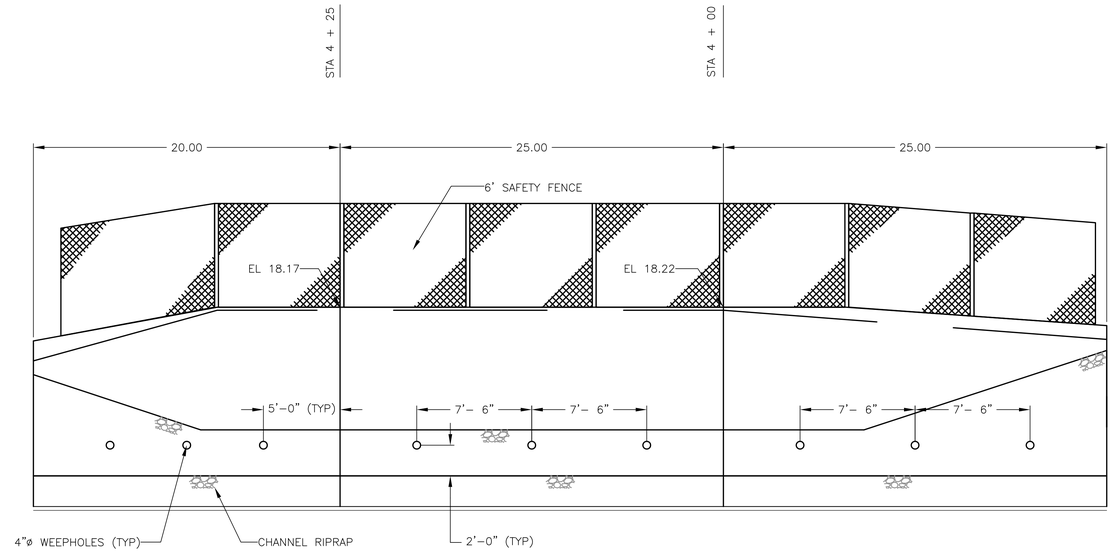

2 / 000000 RETAINING WALL PROFILE

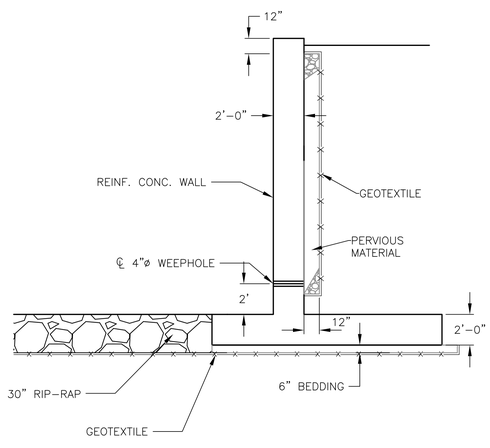

1 / 000000 CHANNEL SECTION @ WING WALL

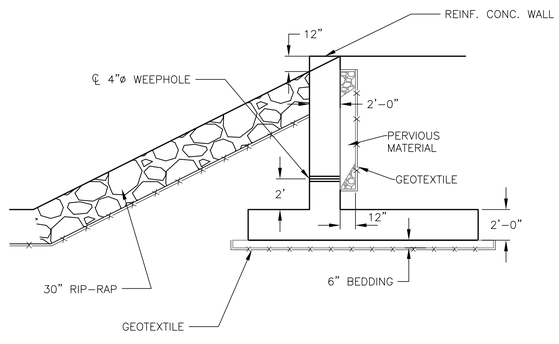

1 / 000000 CHANNEL SECTION @ WING WALL END

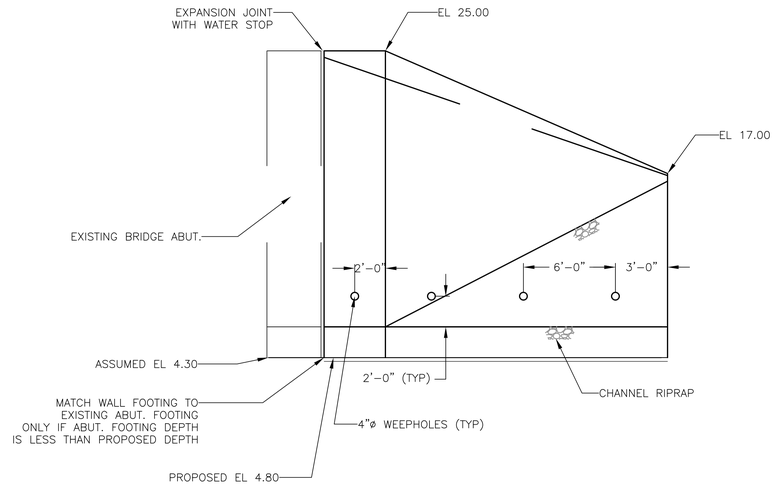

2 / 000000 WARREN ST. BRIDGE WING WALL TYP PROFILE AT NORTH AND SOUTH BRIDGE ABUTMENTS

US Army Corps of Engineers
Philadelphia District

Mark	Description	Date	Appr.	Mark	Description	Date	Appr.

U.S. ARMY ENGINEER DISTRICT, PHILADELPHIA
CORPS OF ENGINEERS
PHILADELPHIA, PENNSYLVANIA

Designed by: CDL
Dwn by: CDL
Ckd by: MKP
Reviewed by: TBW
Submitted by: JRA
Chief, Design Branch
Date: 06 OCT 2011
Rev:
IFB W912BU-XX-X-XXX
Drawing Code: PRE-SUBMITTAL
File name:*DWG
Plot date: –
Plot scale:1" = 1"

LOWER ASSUNPINK CREEK ECOSYSTEM RESTORATION
MERCER COUNTY, NEW JERSEY
STREAM DAYLIGHTING

WALL PROFILES AND SECTIONS

Sheet reference number:
S–500
Sheet 19 of 20

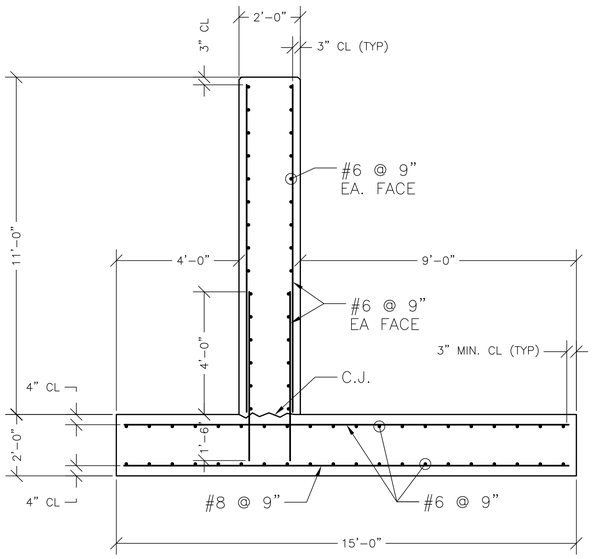

1
000000
RETAINING WALL STEEL REINFORCEMENT

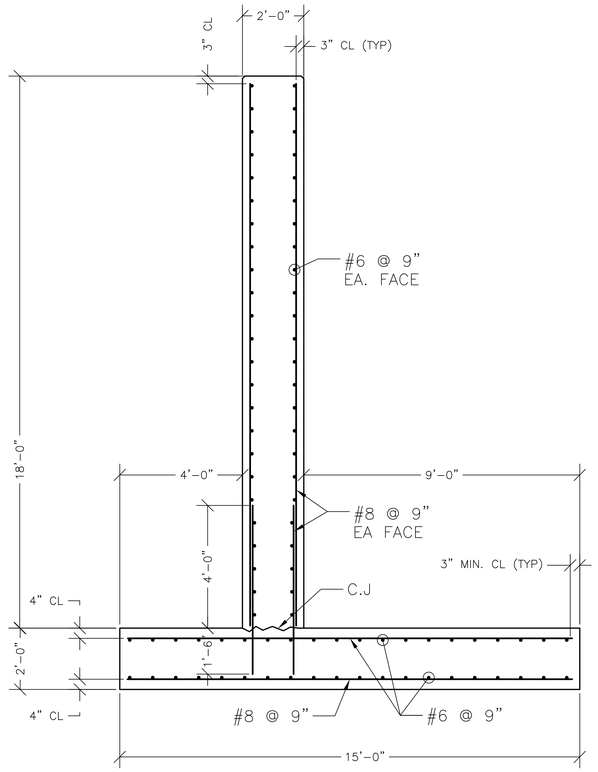

1
000000
WING WALL STEEL REINFORCEMENT

US Army Corps of Engineers
Philadelphia District

Mark	Description	Date	Appr.	Mark	Description	Date	Appr.

U.S. ARMY ENGINEER DISTRICT, PHILADELPHIA
CORPS OF ENGINEERS
PHILADELPHIA, PENNSYLVANIA

Designed by: CDL
Dwn by: CDL
Ckd by: MKP
Reviewed by: TBrown
Submitted by: JRA
Chief, Design Branch
Date: 06 OCT 2011
Rev.
IFB W912BJ-XX-X-XXX
Drawing Code: WWS-WINGWALL
File name: *DWG
Plot date: "
Plot scale: 1" = 1"

LOWER ASSUNPINK CREEK ECOSYSTEM RESTORATION
MERCER COUNTY, NEW JERSEY
STREAM DAYLIGHTING
WALL REINFORCEMENT

Sheet reference number:
S-501
Sheet 20 of 20