Issue # 19 DECEMBER 2013

US Army Corps of Engineers
Marine Design Center

US Army Corps of Engineers MARINE DESIGN CENTER

Marine & Floating Plant Newsletter

Inside this issue:

Floating Plant Highlights—MV GRUGETT	1
EEY Corner	1
Environmental Update	2
Towboat Safety	2
CDMCS	3
Floating Crane Safety	3
Electrical Safety on Steel Vessels	4
Spencer Baird Overhaul	5
Safety Recall	5

Floating Plant Highlights — MV GRUGETT

The MV GEORGE C GRUGETT was delivered to the Memphis District in August of this year. The GRUGETT is an ABS classed towboat built at Horizon Shipbuilders in Bayou La Batre, AL.

GRUGETT Particulars and Equipment:
Length Overall: 114'
Breadth: 35'
Hull Depth: 10'-3"
Draft (full load): 8'-7"
Air Draft: 49'-7"
Fuel Capacity: 21,545 Gal.
Main Engines: (2) Cat 3512C WOSR "A" Rated, 1500 HP each @1800rpm
Reduction Gears: (2) Reintjes WAF 763 - Ratio 5.429:1
Generators: (2) Cat C9 - 150 kW, 480V
Steering: Engine Monitor, Inc. – 4 Main, 4 Flanking Rudders
Barge Winches: (4) Patterson WWP 65E-7.5 14

George C. Grugett was a devoted proponent of flood control, navigation, and the environment on the Mississippi River for more than 65 years. Mr. Grugett is a decorated Army Air Corps combat veteran of World War II, a faithful employee of the Memphis District for more than 35 years, and a visionary leader for the Mississippi Valley Flood Control Association for 33 years. His boundless work and devotion to duty have enriched and protected the lives of millions of people. In his honor this vessel bears his name to continue his legacy of Public Service.

MV GEORGE C GRUGETT

EEY Corner

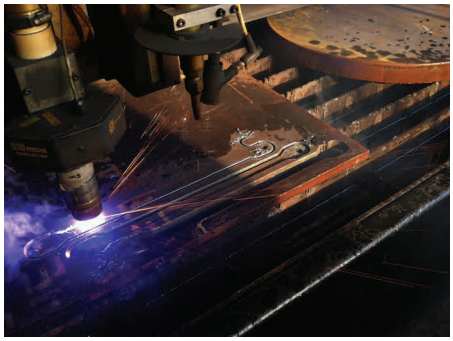

New EEY CNC Plasma Cutting Table

The **EEY Corner** is a standing article in our newsletter. EEY stands for Ensley Engineer Yard (EEY), which is Memphis District's Marine Maintenance Facility.

EEY has recently purchased a CNC Plasma Cutting Table. The table has proven to be a great asset as it has been able to increase productivity in fabricating parts for multiple projects at the same time. What normally took two people hours to torch cut by hand can be input into the controller and the same parts take only a fraction of the time to make with little to no clean-up.

EEY recently rebuilt the baffle plate on the Dredge Hurley. All of the information was loaded into AutoCAD and ProNest and transferred to the controller on the Plasma table. A job that would have normally taken 2-3 days was complete in one day with parts that needed no rework. This allowed the Dredge Hurley to get off dry dock and back (Cont'd on page 6)

Environmental Update

The "new" Final Vessel General Permit (VGP) rule goes into effect this month - December 2013. It could have significant (and costly) impacts on USACE vessels and any other boats performing operations on **scenic rivers**. The VGP Appendix G list the scenic rivers and limits overboard discharges in those locations nationwide. A link to the final VGP is included for reference.

This VGP would restrict any discharges from onboard Oil Water Separator (OWS) and Marine Sanitation Devices (MSD) near "scenic rivers," which would make it burdensome to return vessels to port facilities to pump out what is normally discharged (within allowable discharge limits) overboard. For pipeline dredges, it could make them effectively not viable for work performed on the scenic rivers. Most of the scenic rivers are not commercially navigable, but each district should check those rivers in their District that are on the list.
http://www.epa.gov/npdes/pubs/vgp_permit2013.pdf

Towboat Safety

More information is available at the Towing Vessel National Center of Expertise — www.uscg.mil/tvncoe

This article was paraphrased from the Waterways Journal:

The Towing Vessel National Center of Expertise in Paducah , KY recently published a list of the most common deficiencies found by the USCG on towing vessels between February 2009 and February 2013. Below is the list with applicable comments:

Remote Fuel Oil Shutoff Valves: (46 CFR 27.207) Any fuel line supplying engines or generators must have a shutoff valve that can be remotely operated from outside the space. USACE Safety Manual also requires the valve to be operable from outside the deckhouse.

General Alarm: (46 CFR 27.201) Audible indication must be sounded in accommodations and work space. Audible and visual indication is required in enginerooms. Placards must be posted to direct personnel.

Navigation Lights: (46 CFR 25.10-3) All vessels must have lights in accordance with the International and Inland Navigation Rules. Violations included improper arrangement, type of light, or lack of matte black screens. Household bulbs are unacceptable.

Drug and Alcohol Testing: (46 CFR 4.06-15, 16.230, 16.401) A random testing program is required for licensed crewmembers or others serving in a safety –sensitive position. Testing is required after a serious marine incident, and an EAP is required.

Fire Detection Control Panel: (46 CFR 27.203) The most common issues were failure of the unit to function properly, and failure to be certified by a PE, ABS, or equivalent certification granted .

Logbooks: (47 CFR 80, 33 CFR 164.80) The most common deficiency is the failure to record required information such as radio log, testing navigation safety equipment, General Alarm Tests, etc…

Compass: (33 CFR 164.72) Each towing vessel must be equipped with an illuminated magnetic steering compass, or if engaged exclusively on Western Rivers, a swing meter.

Marine Sanitation Device: (33 CFR 159.7) Towing vessels must have a USCG approved Type I, II, or III MSD. Type II are required of vessels over 65 feet.

Fire Extinguisher Brackets: (46 CFR 162.028(g)) approved marine extinguishers must be secured in brackets that "provide quick and positive release of the extinguisher for immediate release."

Official Number: Commercial vessels are required to have an official number and have it permanently affixed.

Council for Dredging & Marine Construction Safety (CDMCS)

The Council represents a joint effort of the dredging and marine construction industry to collectively improve Industry safety standards. It is a non-profit partnership designed to facilitate dialogue on dredging and marine construction issues and offering additional information concerning safety. CDMCS membership includes federal agencies, professional associations and industry trade groups, organized labor, and construction firms, infrastructure owners and operators, and service providers concerned with the safety of marine construction sites around the nation. Together, CDMCS represents individuals and firms involved in the planning, design, construction, and operation of marine infrastructure. Their goal is to establish a coordinated environment fostering communication, information-sharing, and coordination in order to raise awareness about marine safety.

By maintaining a comprehensive website, listserv, and holding virtual and in-person meetings, CDMCS brings together the top experts of the membership to plan and develop outreach materials and promote partner activities.

http://www.cdmcs.org/index.htm

Floating Crane Safety

Corps floating crane and crane barge operators are aware of the crane construction, vessel and lifting stability, and the naval architecture analysis requirements in Safety Manual (EM 385-1-1). The requirements, found in 16.L FLOATING CRANES/ DERRICKS, CRANE BARGES, AND AUXILIARY SHIPBOARD MOUNTED CRANES, are also applicable to all U.S. Army Corps of Engineers projects, regardless if the work is being completed by Government employees and equipment, or if a contractor is performing the work. Contracts issued for navigation work (levee construction/ maintenance, riprap placement, dike work, etc.) and marine construction should require that work performed is in accordance with EM 385 -1-1. As a result, contractors on civil works projects using floating cranes and crane barges should be submitting stability and naval architecture analyses that satisfy the requirements in 16.L.

Regardless of the size of the crane or barge, these analyses are important to ensure the safety of the crew, equipment and project. Everything from small wheeled/rough terrain type cranes, through the largest crawler or pedestal/ringer crane needs to be evaluated for the barge platform upon which it is working. These analyses ensure that the U.S. Coast Guard lifting stability criteria are satisfied, along with ensuring that the crane will not operate outside the manufacturer's limitations with respect to out-of-level conditions and boom side loading.

Should you or your Safety office require assistance, Marine Design Center has extensive experience preparing stability and naval architecture analyses for the Corps and other Government partners. We also have the ability to quickly review contractor submittals for any civil works project that may involve floating cranes and/or crane barges. Recently, the MDC reviewed stability and naval architecture analyses submitted by Massman Construction for the St. Louis String-Out/Mooring Facility project. Please contact Tim Keyser (215-656-6171) for further details.

Drilling Angled Piles for Stringout—St Louis District

Electrical Safety on Steel Vessels

Ground fault detection is vital on ships to ensure safety by reducing the risk of electrical shock. The American Bureau of Shipping (ABS) requires a ground detection system for each AC system with a grounded neutral in shipboard electrical installations. Ground detection systems should include an ammeter, current transformer (CT), and ammeter switch capable of withstanding the maximum available fault current. The ground fault detection system is intended to measure the fault current at the systems neutral-grounding point.

To ensure accurate fault current readings, the system should be regularly tested. Many times ground fault detection systems are installed on vessels and are ineffective due to multiple ground faults on the system. When there is more than one ground fault, the ammeter will only display a fraction of the total fault current. Since the current transformer and ammeter only measure the fault current at the systems grounding point, the total fault current divides through each point to ground. Typically ships have multiple grounded systems and it is crucial that each have a functioning GFD system. If you are experiencing AC ground faults, it is imperative that they be addressed. Give MDC's Son Tran or Isaac Smith a call if you have any questions at (215) 656-6850.

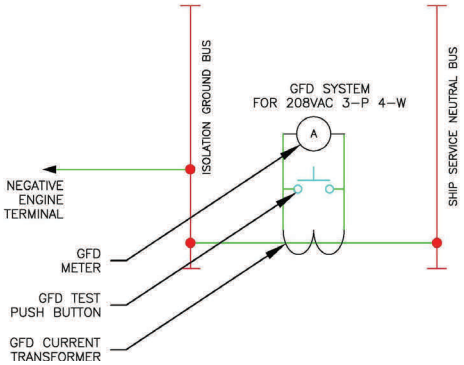

208V AC Ground Detectiuon System

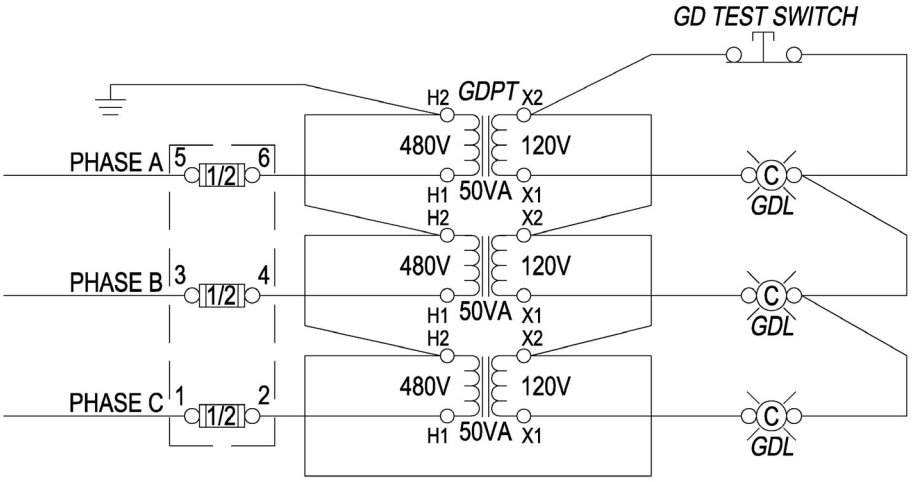

480V AC Ground Detectiuon System

Spencer F. Baird Overhaul

USFWS Research Vessel Spencer F. Baird on Drydock

The Marine Design Center recently lent its technical expertise to the Fish and Wildlife Service for services related to the overhaul of the 95 foot research vessel Spencer F. Baird. MDC provided a complete shipyard overhaul specification which included technical direction for a new bow thruster with controls and variable frequency drive, improved electrical grounding to prevent stray current, a fresh coat of paint, and a 5 year inspection of the running gear among many other items. In addition MDC conducted multiple ship checks in advance of preparing the solicitation to ensure that the supplied specification and drawings were accurate and represented the best possible outcome to the end user. The bids came in on budget and the contract was awarded to Great Lakes Shipbuilding. The overhaul was completed on time and with very few deviations from the original spec.

Safety Recall

A safety recall has been issued for ICON Binnacle Mount Remote Controls by BRP.

The ICON binnacle mount control supplier incorrectly assembled a limited number of control levers which may allow the lever to separate from the mounting base resulting in loss of throttle and shift control. This situation may cause loss of boat control which could lead to serious injuries or even death of the operator, passengers, or people nearby.

If you have this piece of equipment, do not use it and call 1-800-888-4662 for more information on the recall.

EEY Corner (Continued)

in service in less time than they expected. Real customer service!

The Plasma table has increased the capabilities at EEY and they are looking forward to upcoming projects for which the Plasma table will become worth its weight in gold!

Follow MDC on TWITTER

The Marine Design Center is on Twitter. Follow us at @USACE_MDC.
We have been using Twitter to communicate the latest information and photographs of new, ongoing and completed projects, new solicitations and to more broadly disseminate our newsletters.

Please pass this information along to others in your organization.

US Army Corps of Engineers Marine Design Center

The Marine Design Center is the Corps of Engineers center of expertise and experience for the development and application of innovative strategies and technologies for naval architecture and marine engineering. We provide total project management including planning, engineering, and shipbuilding contract management in support of Corps, Army, and national water resource projects in peacetime, and augments the military construction capacity in time of national emergency or mobilization.

Marine Design Center

US Army Corps of Engineers®
Marine Design Center

Special Expertise From MDC

- Safety/Fatality Investigations
- Marine repair support (in advance of yard availability and during)
- Claims Investigations
- Inclinings, Stability, Load Curves, Weight Handling
- Noise and Vibration
- Marine Electrical Systems
- Thermal Imaging
- Drydock and Blocking
- Hull Thickness Surveys (In-water and on drydock)
- Model Testing
- Dredging Systems
- Design & Construction of Floating Plant

Marine Design Center
100 Penn Square East
Room 630 South
Philadelphia, PA 19107

Any questions or suggestions for the next issue can be referred to Vint Bossert at:
Phone: 215-656-6850
E-mail: vinton.c.bossert@usace.army.mil