REVISIONS			
REV	DESCRIPTION	DATE	APPROVED

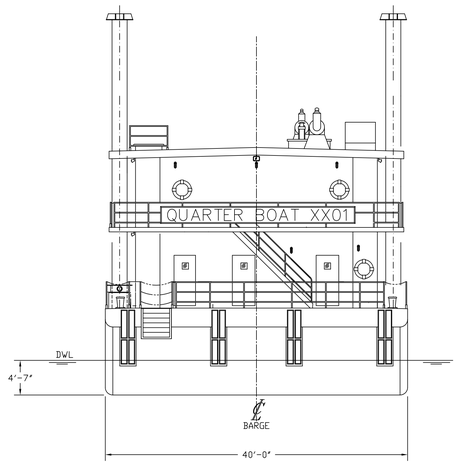

ELEVATION AT STERN

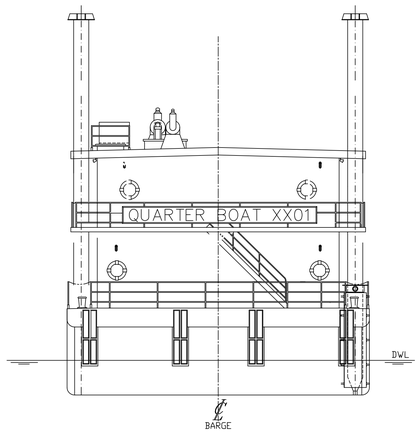

ELEVATION AT BOW

PRINCIPAL PARTICULARS:

LENGTH OVERALL	190'-0"
BEAM OVERALL	40'-0"
DEPTH @ CL	11'-6"
DEPTH @ SIDE	11'-5"
DRAFT	4'-9"
FULL LOAD DRAFT, FW	4'-7"
FULL LOAD AIR DRAFT	32'-7"
FULL LOAD DISPLACEMENT	925 L.T.
ESTIMATE GROSS TONNAGE	2100
STATEROOMS	31
BUNKS	103
MESS HALL SEATING	60
SPUDS (2) FORE & AFT (PORT SIDE)	50' x 2' x 2'

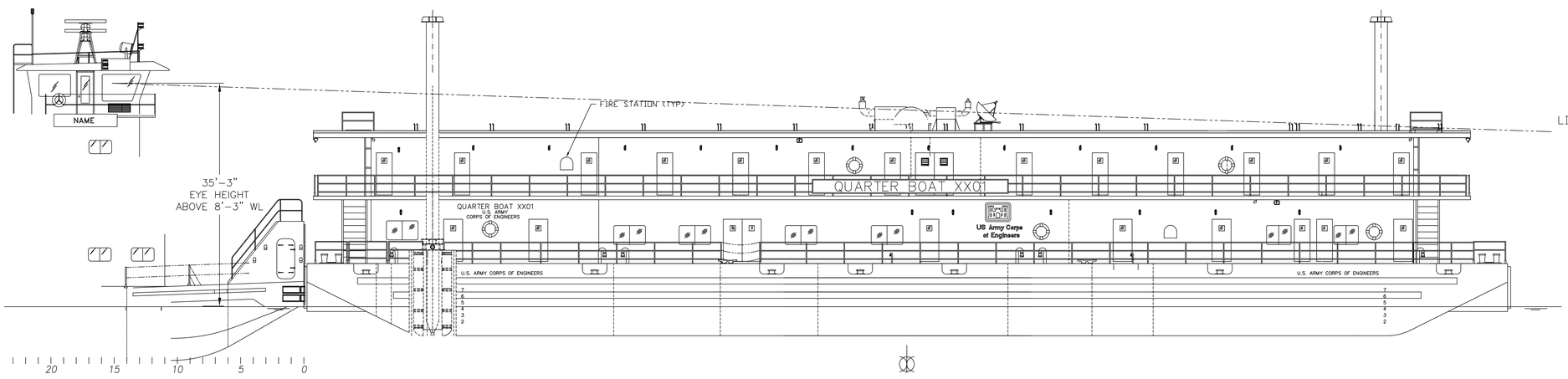

HULL PLAN

PARTICULARS

LENGTH – 190'
WIDTH – 40'
DEPTH – 10'

NO.	MDC PLAN NO.	TITLE

REFERENCES

MARINE DESIGN CENTER PHILADELPHIA, PA	DEPARTMENT OF THE ARMY MARINE DESIGN CENTER CORPS OF ENGINEERS
LEAD PROJ ENGR: Walter Czop / RELEASED - CH MACH SECT	US Army Corps of Engineers — 190' QUARTERS/GALLEY/MESS BARGE
PROJ ENGR - HULL / RELEASED - CH HULL SECT	OUTBOARD PROFILE
PROJ ENGR - MACH: Walter Czop / SUBMITTED - PROJ MGR: /S/ Michael A. Landis	
DRAWN BY: J. ASBURY / RECOMMENDED - CH DES BR: /S/ Gregory Lee, PE	SIZE: E / PROJECT NO.: 2457 / DWG. NO.: 596-205-01-A / REV
DATE: APR. 08, 2002 / APPROVED - DIRECTOR: /S/ David L. Horton, PE	SCALE: 1/8" = 1'-0" / SHEET 1 OF 1
	G:\CAD\PROJECTS\596\205011A.DWG / PLOT SCALE: .125=12