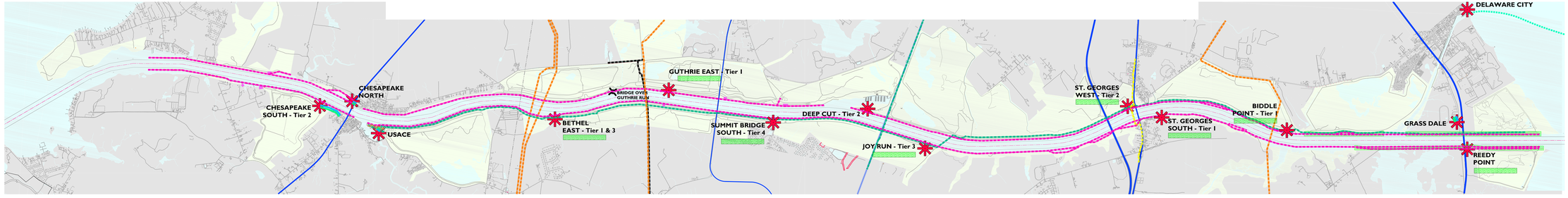

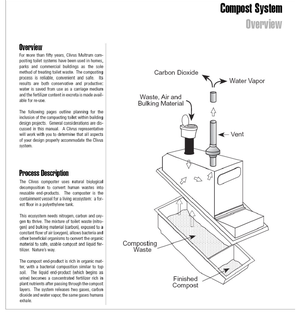

Overview

For more than fifty years, Citrus Mulman composting toilet systems have been used in homes, parks and commercial buildings as the sole means of human waste disposal. Composting provides a reliable, convenient and safe. Its results are both conservative and productive: water is saved from use as a carriage medium and the fertilizer content in excreta is made available for re-use.

The following pages outline planning for the inclusion of the composting toilet within building design projects. General considerations are discussed in this manual. A Citrus representative will work with you to determine that all aspects of your design properly accommodate the Citrus system.

Process Description

The Citrus composter uses natural biological decomposition to convert human wastes into reusable end-products. The composter is the containment vessel for a living ecosystem: a fertile soil flour in a polyethylene tank.

This ecosystem needs nitrogen, carbon and oxygen to thrive. The mixture of toilet waste (nitrogen), bulking material (carbon) and air (oxygen) in the constant flow of air (oxygen), allows bacteria and other beneficial organisms to convert the organic material to safe, stable compost and liquid fertilizer. Nature's way.

The compost end-product is rich in organic matter, with a bacterial composition similar to topsoil. The liquid end-product (which begins as urine) becomes a concentrated fertilizer rich in plant nutrients after passing through the compost layers. The system releases two gases, carbon dioxide and water vapor, the same gases humans exhale.

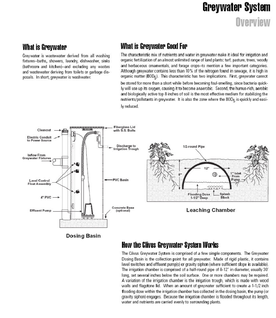

What is Greywater

Greywater is wastewater derived from all washing fixtures (sinks, showers, laundry, dishwasher, baths) (bathroom and kitchen) and excluding any wastes and wastewater derivedy from toilets or garbage disposals. In short, greywater is wastewater.

What is Greywater Good For

The characteristic mix of nutrients and water in greywater make it ideal for irrigation and organic fertilization of an almost unlimited range of land plants: turf, pastures, trees, woods and herbaceous ornamentals, and forage crops (to mention a few important categories). Greywater contains nitrogen, phosphorus, potassium, sodium, calcium, and other organic matter (BOD5). These characteristics have two implications. First, greywater cannot be stored for more than a short while before becoming foul-smelling, since bacteria quickly will use up its oxygen, causing it to become anaerobic. Second, the human-rich, aerobic and biologically active top 8 inches of soil is the most effective medium for stabilizing the nutrients/pollutants in greywater. It is also the zone where the BOD5 is rapidly and naturally reduced.

How the Citrus Greywater System Works

The Citrus Greywater System is comprised of a few simple components. The Greywater Dosing Basin is the collection green for all greywater. Made of rigid plastic, it contains level switches and effluent pump(s) or gravity siphon (where sufficient slope is available). The irrigation chamber is comprised of a half-round pipe of 6-12" in diameter, usually 30' long, set several inches below the soil surface. One or more chambers may be required depending on the size of the greywater flow and the soil type. Sizing is based on Maryland soils and Regulation 80. When an amount of greywater sufficient to create a 1-2 inch flooding dose within the irrigation chamber has collected in the dosing basin, the pump (or gravity siphon) engages. Because the irrigation chamber is flooded throughout its length, water and nutrients are carried evenly to surrounding plants.

In addition to tank capacity, the height of the composter may be a determining factor in the choice process. Available headroom is the projected tank minimum may limit options.
Figure 1 shows the tank, which is normally mounted flat and 48" for vertical transition.

It is recommended that the model(s) selected allows at least 10% additional capacity beyond the rated area level to account for inaccuracies in the estimation of overall facility use. Also to be considered is the potential for future increase in a growth in utilization in the foreseeable future (see Figure 2). Consult Citrus for final choice of model.

Restroom Building Design

Composter Enclosure

Sufficient space must be allotted directly under the toilet room to house the composter(s). The lower level floor must have a solid, stable surface, such as concrete, and would ideally have a drain in the center of the tank. The floor area should not be at risk of flooding due to high ground water or entry of water from any outside source. Proper drainage or a sump should be provided.

One foot of clearance on each side of the tank is needed for assembly. Once assembled, the tank can be positioned with its back against a wall and with a minimum of one inch of side clearance to allow the lower lid to be raised. A minimum of four feet should be left clear in front of the composter for general maintenance procedures.

It may be important that the tank enclosure be made secure from vandalism.

Access Requirements

It should be planned that the compost tank(s) with the lower lid raised be accessible to a closed van. If this is not possible, it will be necessary to allow adequate access to the composter enclosure area for tank placement after the toilet room floor is in place. Furthermore, for tank vandalism areas, it is recommended that access to the lower level be large enough for replacing a destroyed tank.

Figure 2 shows the minimum openings necessary for each tank. This access should be directly to the outside, not through the toilet room. If a standard 32-inch doorway is not possible, a 24-inch door (with the hinges reversed and removed) or an existing slope may allow a doorway to be created at the lowest grade. Access from the toilet room via a manway or trap door is not recommended. See Figure 3.

This same opening will allow access for removal of finished compost and for removal of liquid products from the tank. Direct access from the lower level to the outside of the structure allows for routine maintenance and removal of end-products without interruption of the facility operation.

Headroom

Minimum clearance of one foot is needed above the composter for installation of horizontally oriented ventilation equipment (10" for vertical mounting) and the installation of toilet chutes. This should be measured to the bottom of any ceiling or structural members. Care must be taken that no other building systems (e.g. HVAC, plumbing, lighting) are within a free foot area in front of the composter, from floor to ceiling.

Storage Tanks

The Citrus system generates a liquid end-product that requires storage pending re-use or disposal. Provision must be made for one or more storage tanks, depending on the size of the facility. Also, in the absence of a pressurized water line, it will be necessary to have a tank located near the composter to hold fresh water for compost pile moistening. Sizing considerations are discussed further in this manual.

Figure 3.

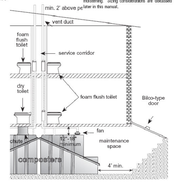

CHESAPEAKE & DELAWARE CANAL RECREATION STUDY | UTILITY DIAGRAM FOR MULTI-USE PATH AND AMENITIES

0 .1 .2 .3 .4 .5 Mile 1.0 Mile

SCALE: 1"=1000' DATE: 09/26/05

andropogon