US Army Corps
of Engineers

SPECIALTY BARGES

REVISIONS					
REV	ZONE	ITEM	DESCRIPTION	DATE	APPROVED

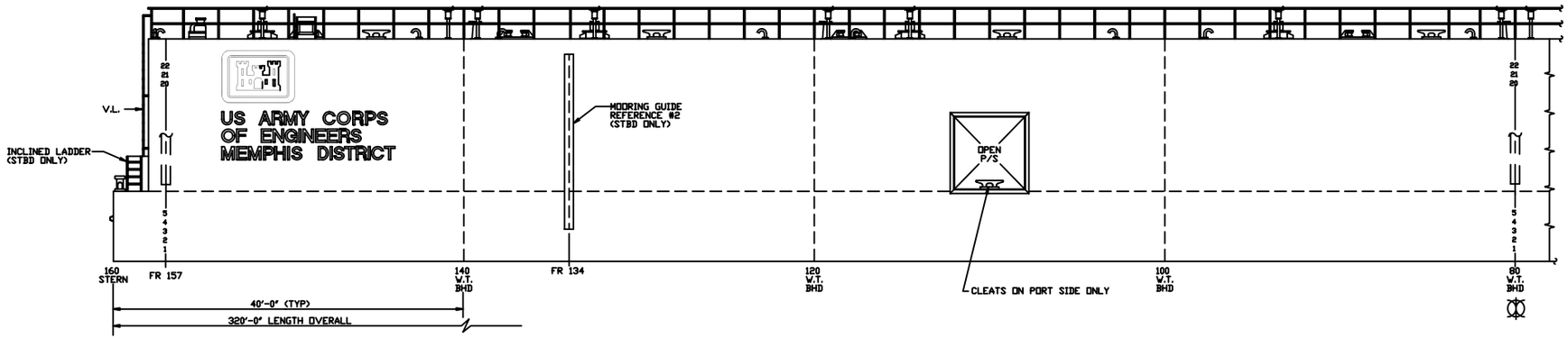

OUTBOARD PROFILE

STBD SHOWN - PORT SIM TO OPP HAND
(EXCEPT AS NOTED)
AFT

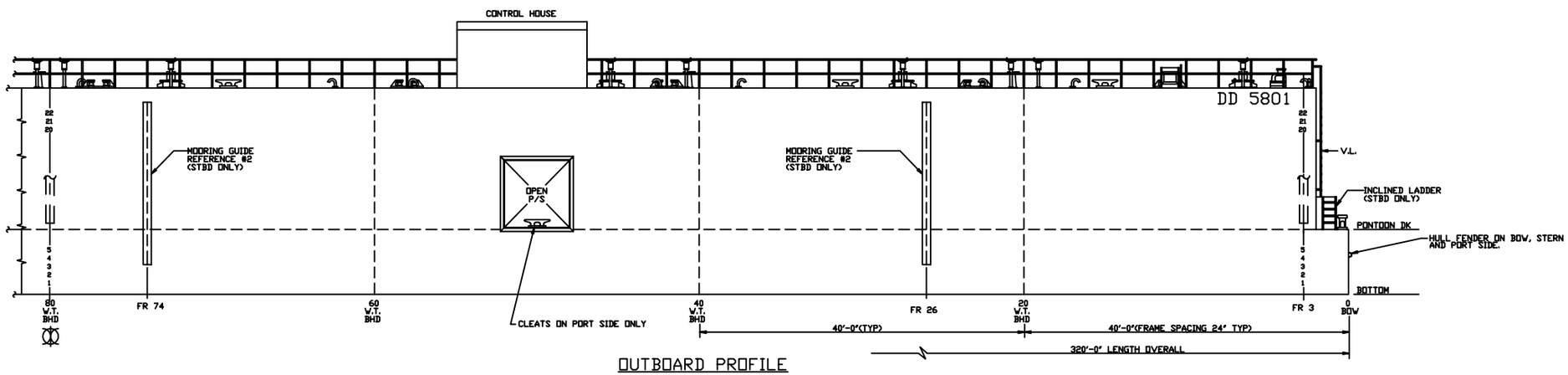

OUTBOARD PROFILE

STBD SHOWN - PORT SIM TO OPP HAND
(EXCEPT AS NOTED)
FWD

NO.	TITLE	DRAWING NUMBER
3	HULL MARKING AND IDENTIFICATION	301-D460-01
2	MOORING ARRANGEMENT	301-D225-01
1	GENERAL ARRANGEMENT	301-D215-01

REFERENCES

HALTER MARINE INC.

DRAWN BY: JL	10-16-20	DATE
CHECKED BY: JEM	10-16-20	DATE
APPVD: V.R.HUDSON	10-22-20	DATE
APPVD: A.D.S.		DATE
APPVD: U.S.A.C.E.		DATE
APPVD:		DATE
JOB NO.	HULL NO.	

DEPARTMENT OF THE ARMY
MARINE DESIGN CENTER
CORPS OF ENGINEERS

DREDGE HURLEY ATTENDANT PLANT
DRYDOCK NO. 5801

OUTBOARD PROFILE

SIZE	FSCM NO.	DWG NO.	REV
F	2166	301-D205-01	

SCALE: 3/16"=1'-0" | EST. WEIGHT | SHEET: 1 OF 1

SH. 1
DWG NO. 301-D205-01

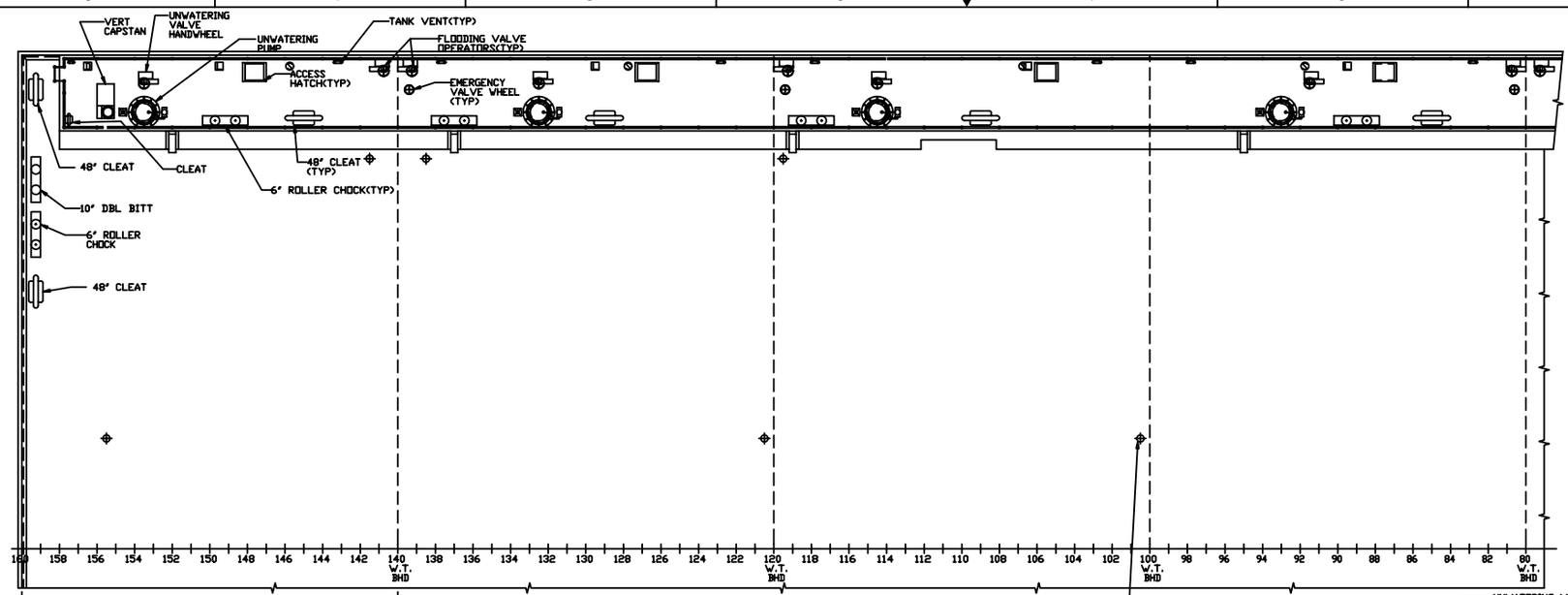

PLAN VIEW

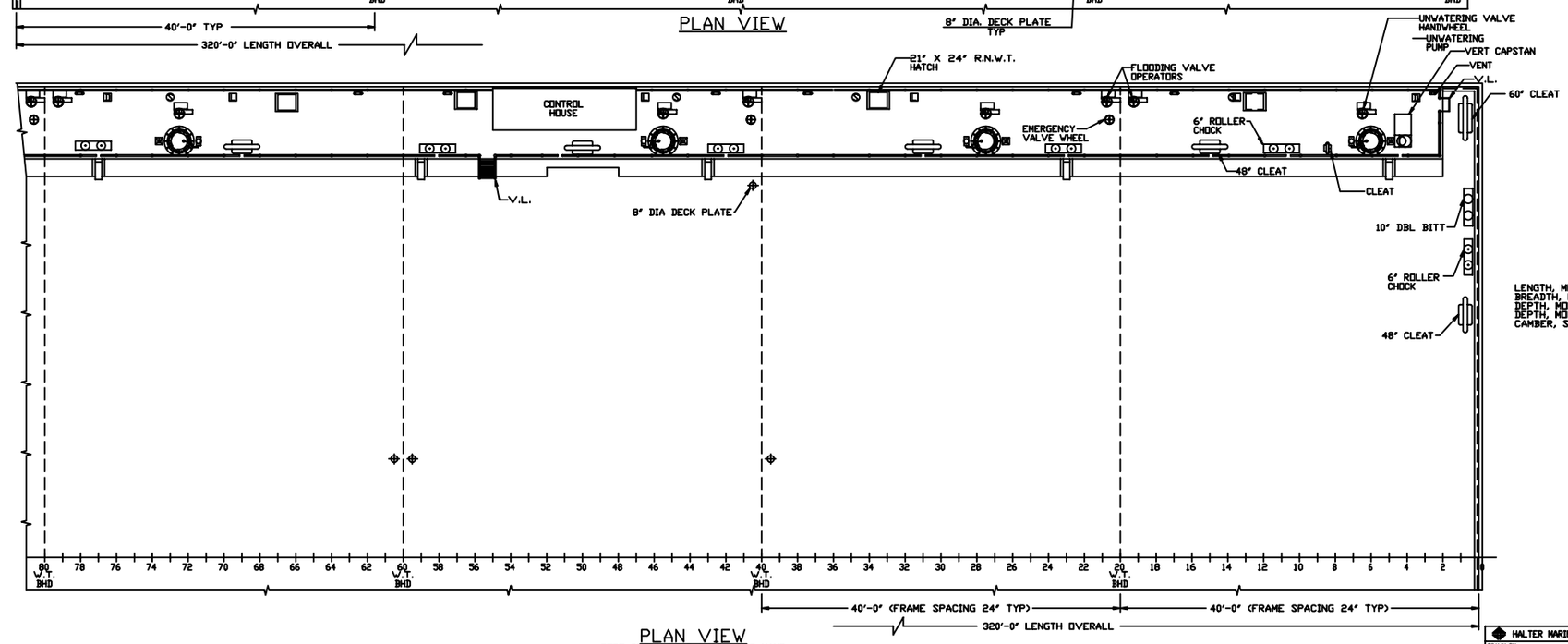

PLAN VIEW
PORT SHOVN-STBD SIM TO OPP HAND
EVN

PRINCIPAL DIMENSIONS

LENGTH, MOLDED----------320'-0"
BREADTH, MOLDED----------105'-0"
DEPTH, MOLDED, PONTOON DK AT CENTERLINE----------8'-0"
DEPTH, MOLDED, WINGWALL DK AT SIDE----------25'-6"
CAMBER, STRAIGHT TAPER--6" FROM 10'-0" TO 52'-6" OFF CL

REVISIONS				
REV	ZONE	DESCRIPTION	DATE	APPROVED

NO.	TITLE	DRAWING NUMBER

REFERENCES

HALTER MARINE INC.
DRAWN BY K.B. 11-01-90 DATE
CHECKED BY JEM 11-05-90 DATE
APPVD V.R. HUDSON 11-05-90 DATE
APPVD A.D.S. DATE
APPVD U.S.A.C.E. DATE
APPVD DATE
JOB NO. HULL NO.

DEPARTMENT OF THE ARMY
MARINE DESIGN CENTER
CORPS OF ENGINEERS
DREDGE HURLEY ATTENDANT PLANT
DRYDOCK NO. 5801

GENERAL ARRANGEMENT

SIZE F | FSCM NO. 2166 | DWG NO. 301-D215-01 | REV
SCALE: 3/16"=1'-0" | EST. WEIGHT | SHEET: 1 OF 2

DWG NO. 301-D215-01 SH 1

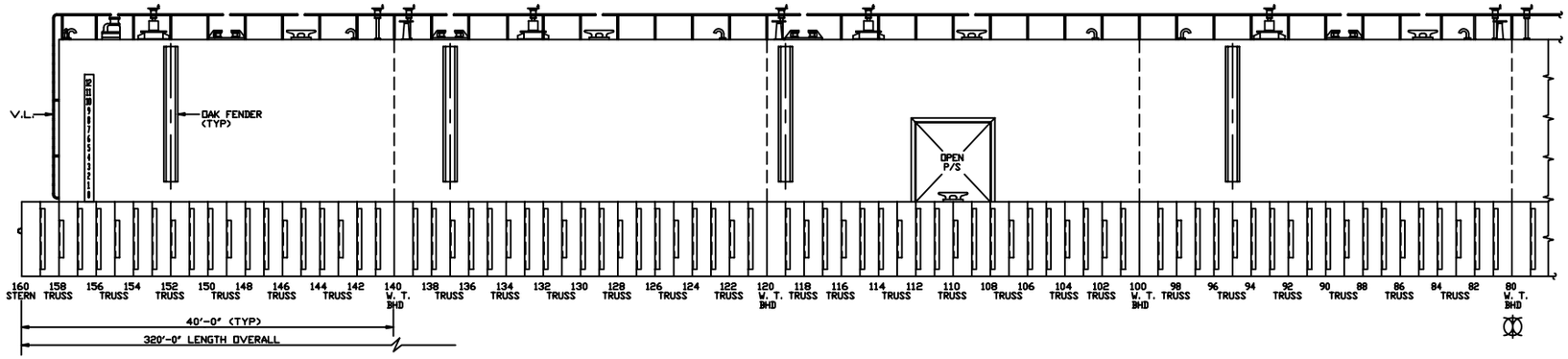

INBOARD PROFILE

PORT SHOWN - STBD SIM TO OPP HAND
AFT

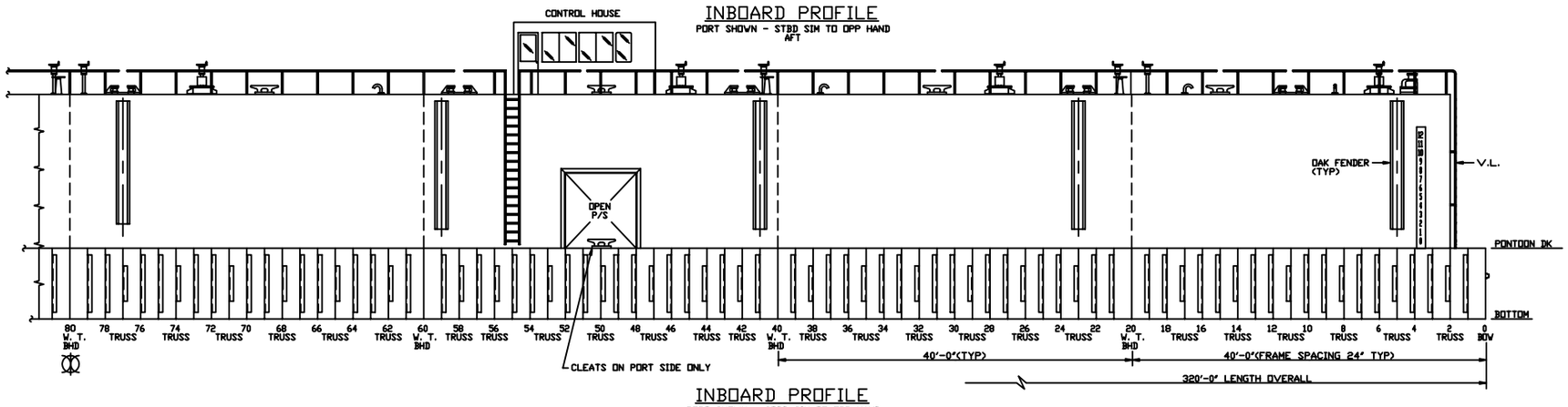

INBOARD PROFILE

PORT SHOWN - STBD SIM TO OPP HAND
FWD

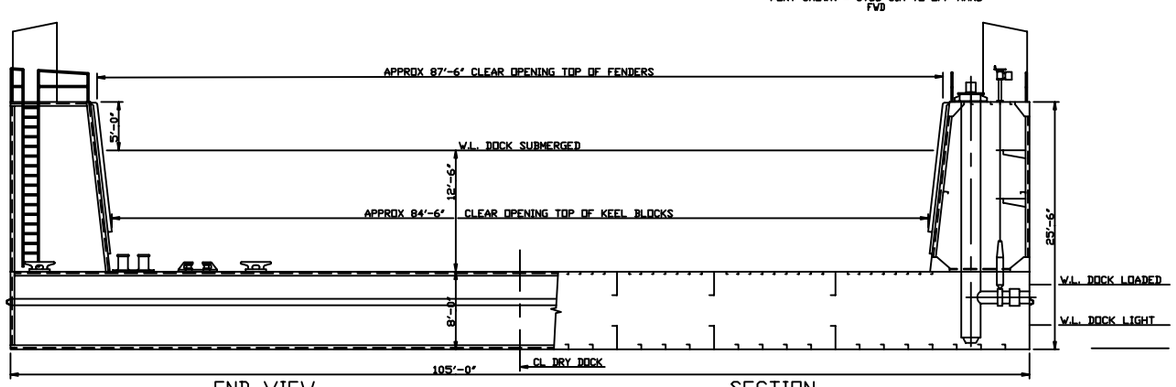

END VIEW

SECTION

SIZE	FSCM NO.	DWG NO.	REV
F	2166	301-D215-01	
SCALE: 3/16" = 1'-0"		EST. WEIGHT	SHEET: 2 OF 2

DWG NO. 301-D215-01 SH 2

REVISIONS			
SYM	DESCRIPTION	DATE	APPROVED
0	FINAL ISSUE	10-28-91	
0	1. IN PLAN 5-A,13-A,21-A AND ELEV 29-A & 29-D ADDED 36' CLEAT AT STERN AND RELOCATED AFT DECK WINCHES TO FR 65 PER RFP 015. 2. ELEV 29-A & 29-D. REVISED FENDER SECTIONS IN PIVOT STRUCTURE TO TRAPEZOIDAL SECTION. 3. MODIFIED ENDS OF TRUSS WALKWAY & DAVIT TRUSS WALKWAY IN PLANS 5-A, 13-A & 21-A TO SUIT AS BUILT CONDITIONS. THIS INCORPERATES MDC LTR 216(PL)-1435.		
	THIS DRAWING 'AS BUILT'	2-4-93	J. WILSON

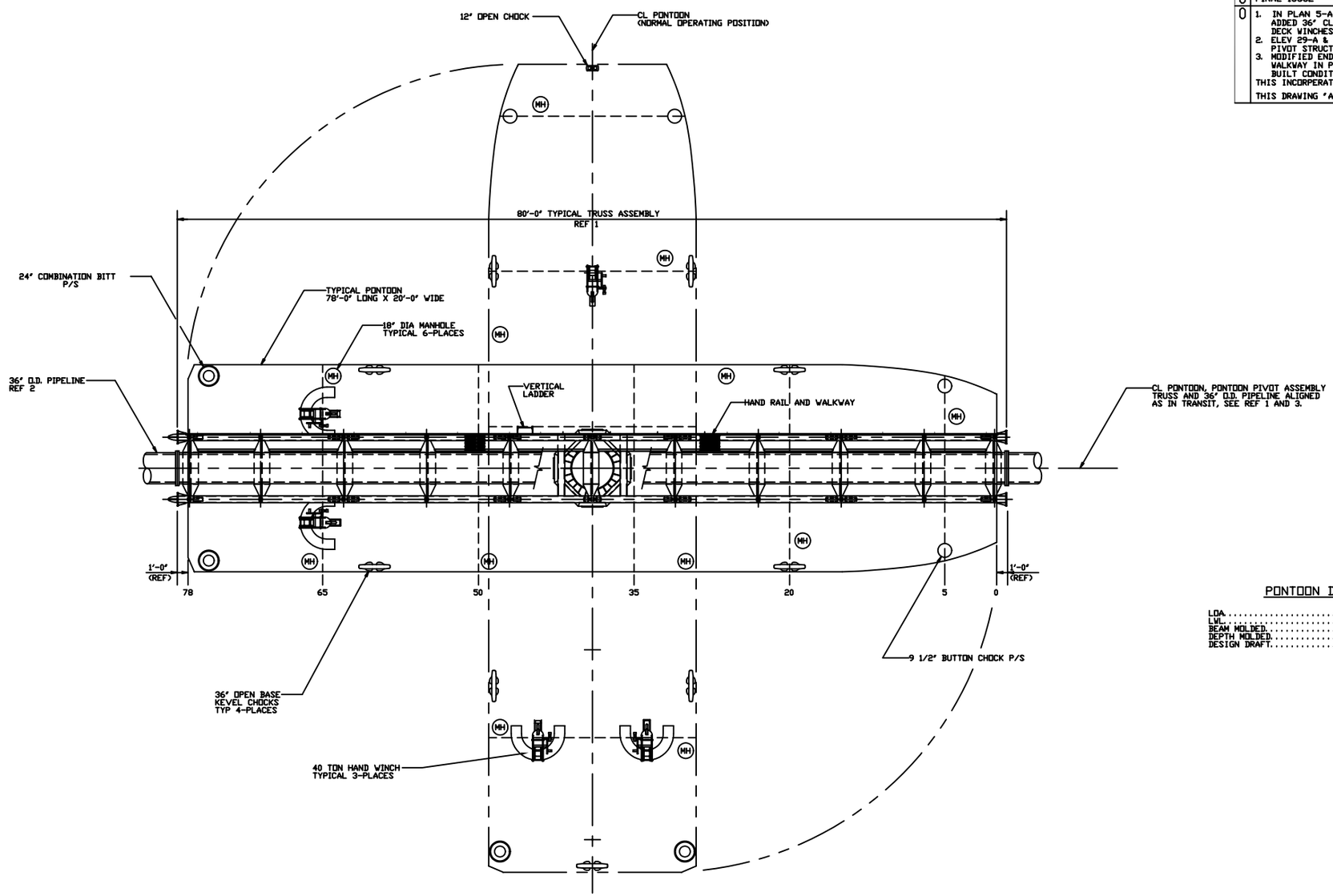

PONTOON DATA

LOA.....78'-0"
LWL.....77'-8"
BEAM MOLDED.....20'-0"
DEPTH MOLDED.....3'-0"
DESIGN DRAFT.....1'-6"

PLAN VIEW 5-A 1.3
TYPICAL INTERMEDIATE PONTOON ASSEMBLY

LONGITUDINAL CENTERLINES ALIGNED AS IN TRANSIT AND PERPENDICULAR AS IN NORMAL OPERATION

NO	TITLE	DWG NO
6	OUTBOARD PROFILE	442-D205-01
5	DAVIT TRUSS ASSEMBLY ARRANGEMENT AND DETAILS	406-D536-01
4	BAFFLE ASSEMBLY ARRANGEMENT	406-D534-01
3	PIVOT POINT STRUCTURE AND DETAILS	406-D533-01
2	PIPELINE ARR AND DETAILS	406-D502-01
1	GENERAL ARR, TRUSS AND WALKWAY	406-D530-01

REFERENCES

J.H. Inc.
DRAWN BY: TKR
CHECKED BY: SMH
SUPV'S BY: V. R. HUDSON 6-18-90
APPROVED BY: V. Y. CHEN 10-28-91
APPV'D FOR MARINE DESIGN CENTER: RICHARD C. LOCKWOOD
DATE: 91-11-01

US ARMY ENGINEER
MARINE DESIGN CENTER

DUSTPAN DREDGE HURLEY PIPELINE SYSTEM
PIPELINE PONTOON

GENERAL ARRANGEMENTS

SIZE	MDC PROJECT NO	DWG NO	REV NO
F	2166	406-D215-01	0

SCALE: 1/4"=1'-0"
SHEET 1 OF 4

406-D215-01 1

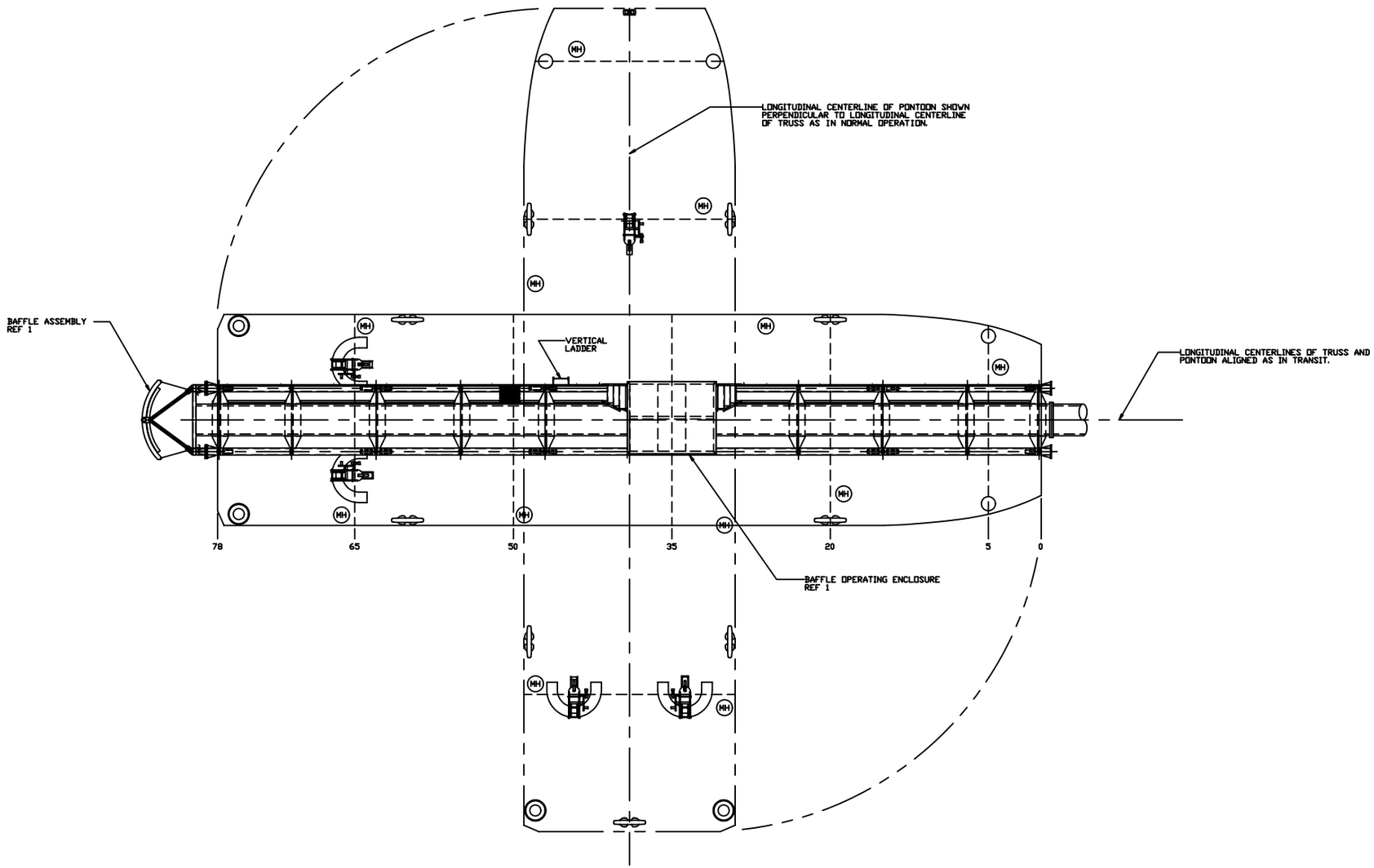

PLAN VIEW 13-A 0 1.3

END PONTOON ASSEMBLY

LONGITUDINAL CENTERLINES ALIGNED AS IN TRANSIT AND PERPENDICULAR AS IN NORMAL OPERATION

FOR INFO NOT SHOWN SEE PLAN 5-A

SIZE	NSC PROJECT NO	DWG NO	REV NO
F	2166	406-D215-01	0
SCALE: 1/4"=1'-0"			SHEET 2 OF 4

406-D215-01 2

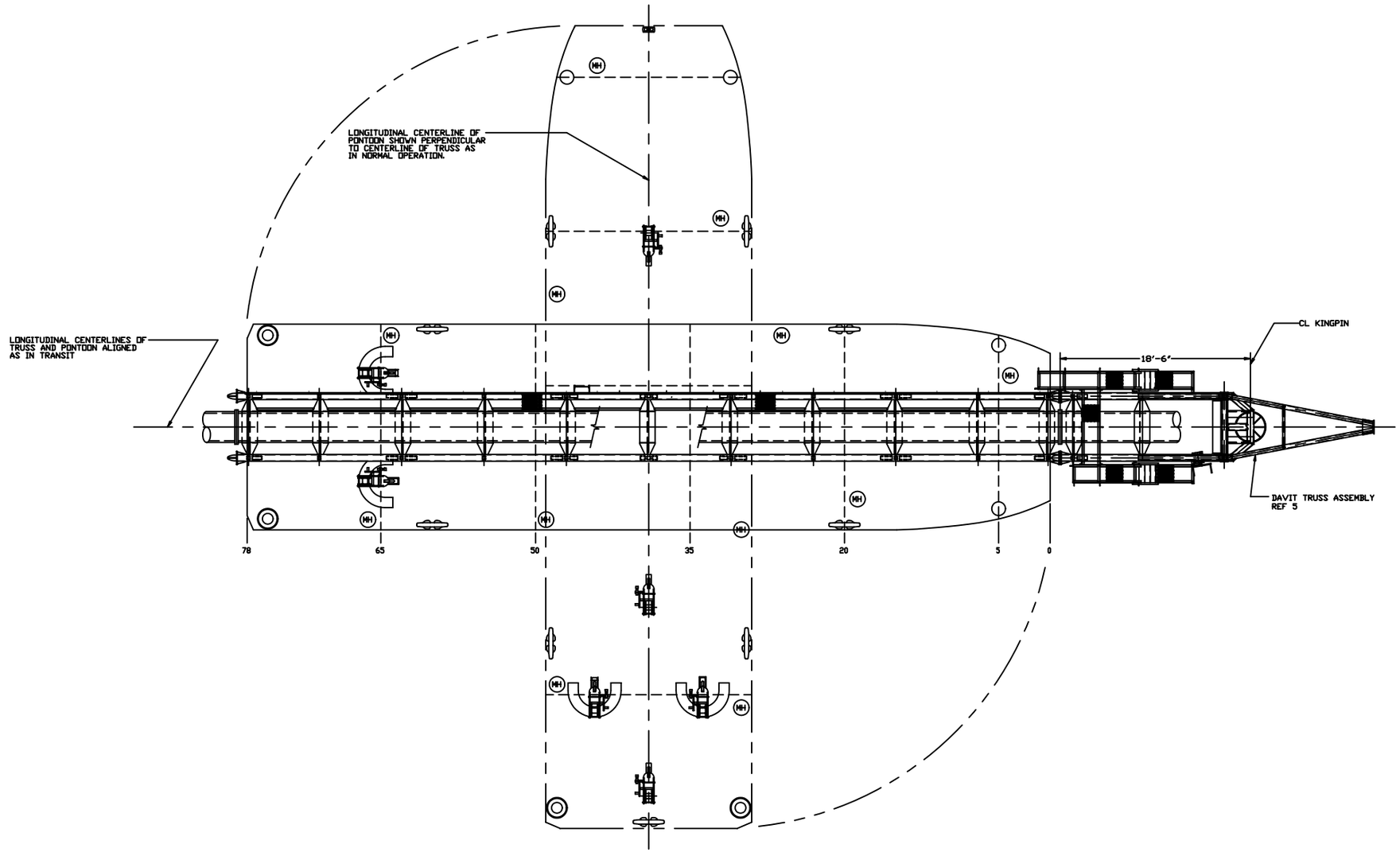

PLAN VIEW 21-A 0 1,3

FIRST PONTOON ASSEMBLY

LONGITUDINAL CENTERLINES ALIGNED AS IN TRANSIT AND PERPENDICULAR AS IN NORMAL OPERATION

FOR INFO NOT SHOWN SEE PLAN 5-A

SIZE	NSC PROJECT NO	DWG NO	REV NO
F	2166	406-D215-01	0
SCALE: 1/4"=1'-0"			SHEET 3 OF 4

406-D215-01 3

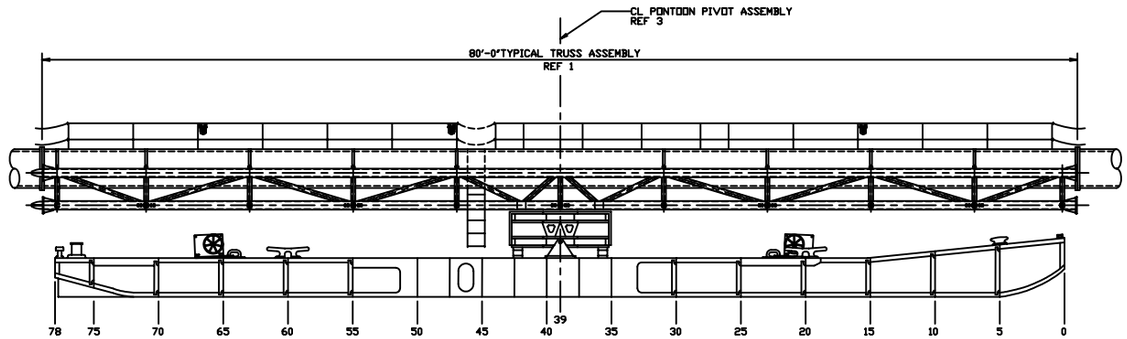

ELEVATION 29-D 1,2
TYPICAL PONTOON ASSEMBLY
INBOARD PROFILE W/LONGITUDINAL CENTERLINES
ALIGNED UNDER PIPELINE AS IN TRANSIT

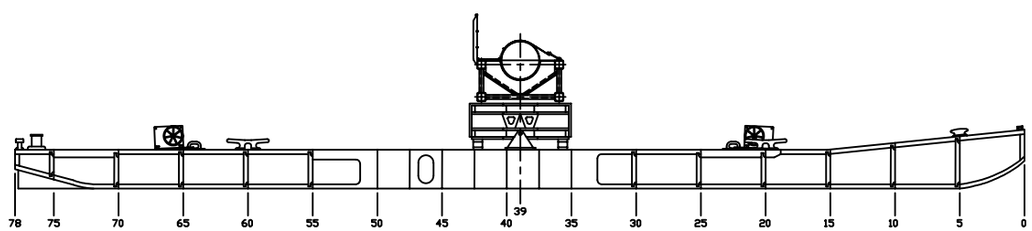

ELEVATION 29-A 1,2
TYPICAL PONTOON ASSEMBLY
INBOARD PROFILE W/LONGITUDINAL CENTERLINES
ALIGNED WITH CURRENT AS IN NORMAL OPERATION

SIZE	NOC PROJECT NO	DWG NO	REV NO
F	2166	406-D215-01	0
SCALE: 1/4"=1'-0"			SHEET 4 OF 4

406-D215-01 4

REVISIONS			
SYM	DESCRIPTION	DATE	APPROVED
0	FINAL ISSUE	10-28-91	
0	1. ELEV 6-A, 6-D, 13-A, 13-D, 21-A & 21-D MODIFIED FENDERS, FOR PIVOT STRUCTURE TO REFLECT TRAPAZOIDAL SECTIONS AND 36' CLEAT ON STERN. 2. RELOCATED WINCHES AFT FR 50 TO FR 65 PER RFP 15. 3. ADDED VESSEL MARKINGS TO 6-A, 6-D, 13-A, 13-D, 21-A & 21-D. THIS REVISION INCORPERATES MDC LTR 2166(PL)-1435. THIS DRAWING 'AS BUILT'	2-3-93	J. WILSON

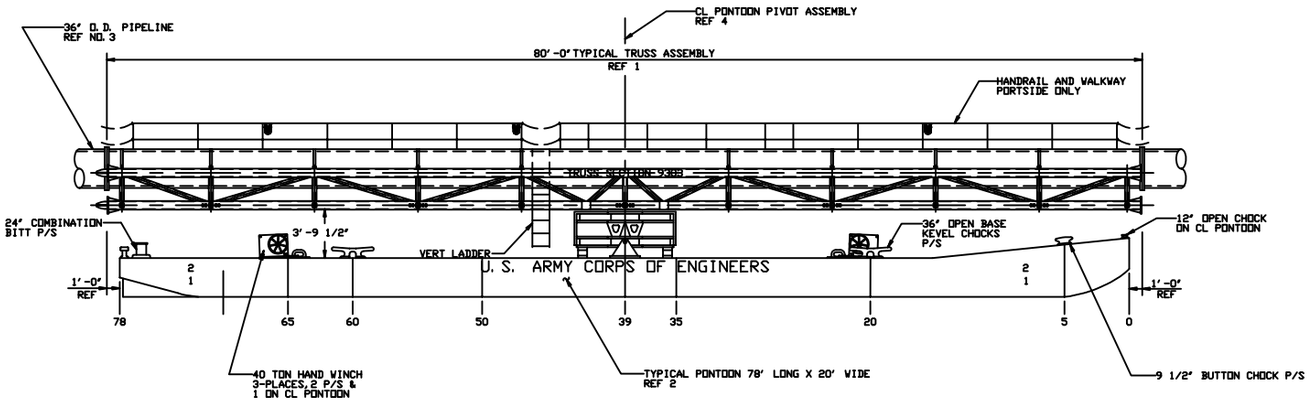

ELEVATION 6-D 1,2,3

TYPICAL INTERMEDIATE PONTOON ASSEMBLY

OUTBOARD PROFILE W/LONGITUDINAL CENTERLINES
ALIGNED AS IN TRANSIT

PONTOON DATA

LOA.....78'-0"
LWL.....77'-2"
BEAM MOLDED.....20'-0"
DEPTH MOLDED.....3'-0"
DESIGN DRAFT.....1'-6"

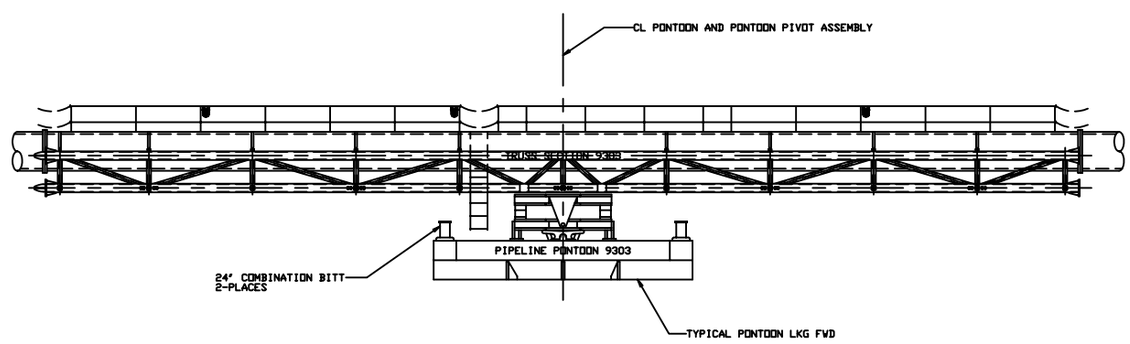

NOTE: 40 TON HAND WINCH NOT SHOWN
FOR CLARITY.

ELEVATION 6-A 1,3

TYPICAL INTERMEDIATE PONTOON ASSEMBLY

OUTBOARD PROFILE W/LONGITUDINAL CENTERLINES
PERPENDICULAR AS IN NORMAL OPERATION

NO	TITLE	DWG NO
7	OUTBOARD PROFILE	442-D205-01
6	DAVIT TRUSS ASSEMBLY ARRANGEMENT AND DETAILS	406-D536-01
5	BAFFLE ASSEMBLY ARRANGEMENT	406-D534-01
4	PIVOT POINT STRUCTURE AND DETAILS	406-D533-01
3	PIPELINE ARRGT AND DETAILS	406-D502-01
2	GENERAL ARRANGEMENTS	406-D215-01
1	GENERAL ARR, TRUSS AND WALKWAY	406-D530-01

REFERENCES

JJH Inc.
DRAWN BY: TKR
CHECKED BY: SMH
SUPV'D BY: W. R. HUDSON 6-15-90
APPROVED BY: V. Y. CHEN 10-28-91
APPR. FOR MARINE DESIGN CENTER: RICHARD C. LOCKWOOD
DATE: 91-11-01

US ARMY ENGINEER
MARINE DESIGN CENTER

DUSTPAN DREDGE HURLEY PIPELINE SYSTEM
PIPELINE PONTOON

OUTBOARD PROFILE

SIZE	MDC PROJECT NO	DWG NO	REV NO
F	2166	406-D205-01	0

SCALE: 1/4"=1'-0"
SHEET 1 OF 3

406-D205-01 1

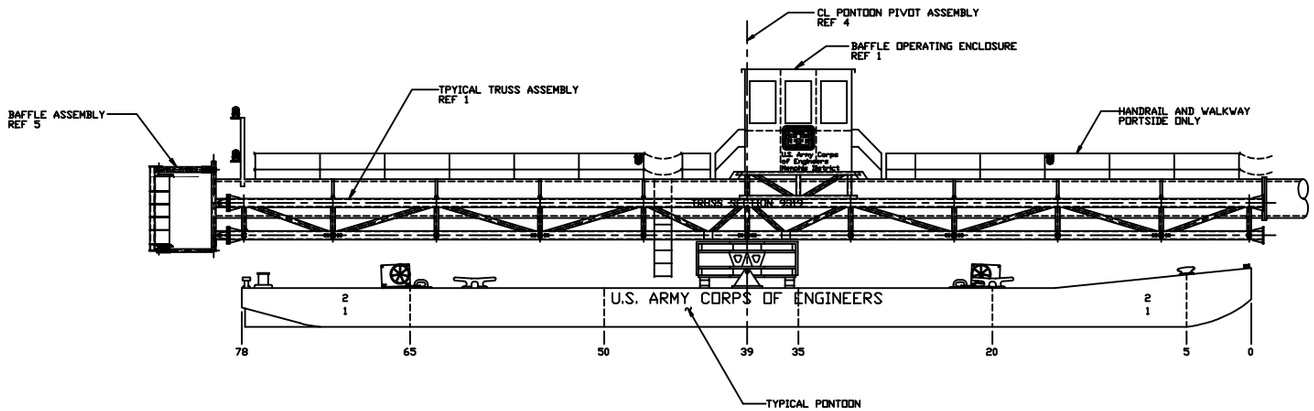

ELEVATION 13-D 1,2,3
END PONTOON ASSEMBLY
OUTBOARD PROFILE W/LONGITUDINAL CENTERLINES
ALINGNED AS IN TRANSIT
(SEE EL 6-D FOR INFO NOT SHOWN)

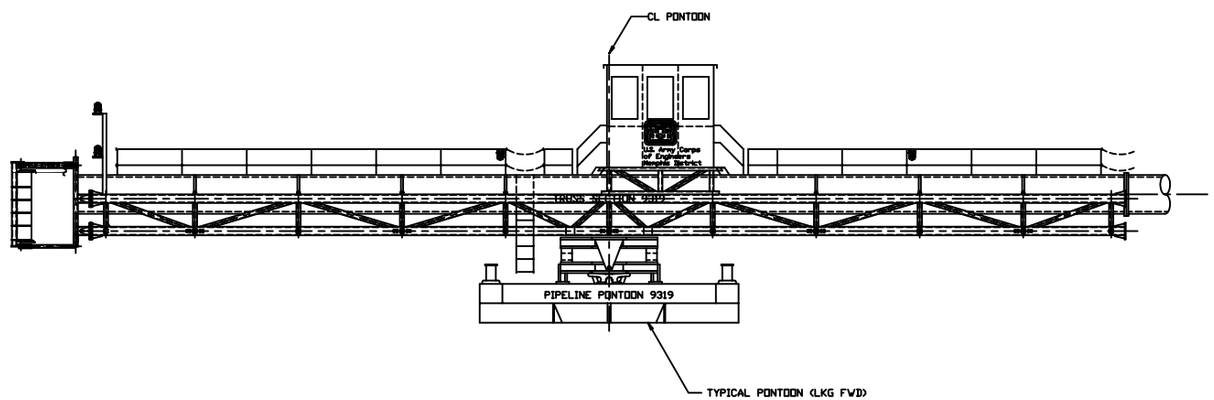

ELEVATION 13-A 1,3
END PONTOON ASSEMBLY
OUTBOARD PROFILE W/LONGITUDINAL CENTERLINES
PERPENDICULAR AS IN NORMAL OPERATION
(SEE EL 6-A FOR INFO NOT SHOWN)

SIZE	NSC PROJECT NO	DWG NO	REV NO
F	2166	406-D205-01	0
SCALE: 1/4"=1'-0"			SHEET 2 OF 3

406-D205-01 2

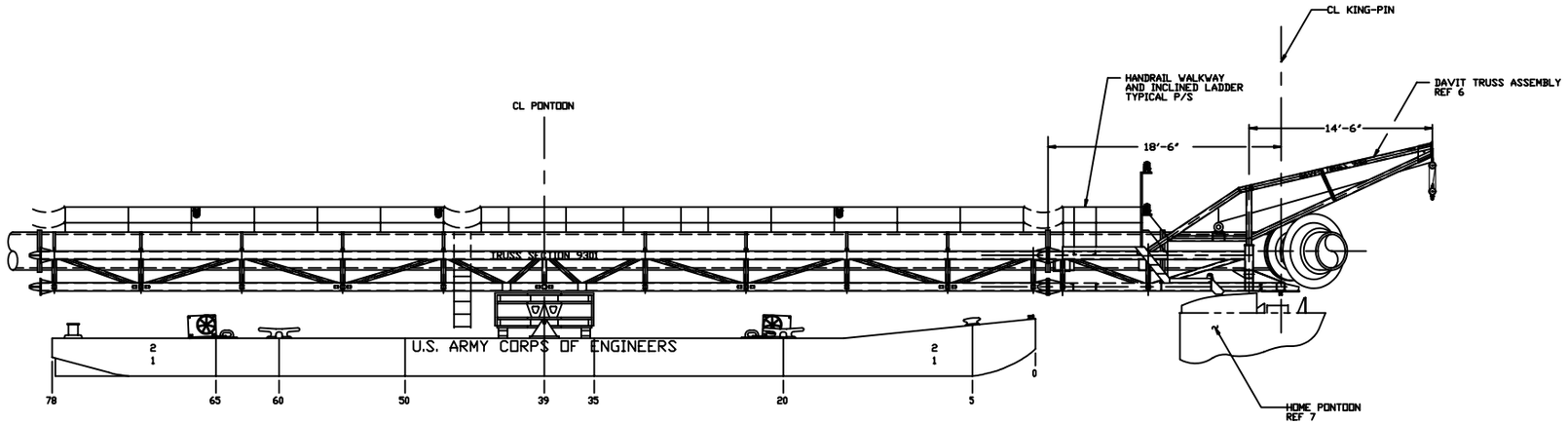

ELEVATION 21-D [1,2,3]
FIRST PONTOON ASSEMBLY
OUTBOARD PROFILE W/LONGITUDINAL CENTERLINES ALIGNED AS IN TRANSIT

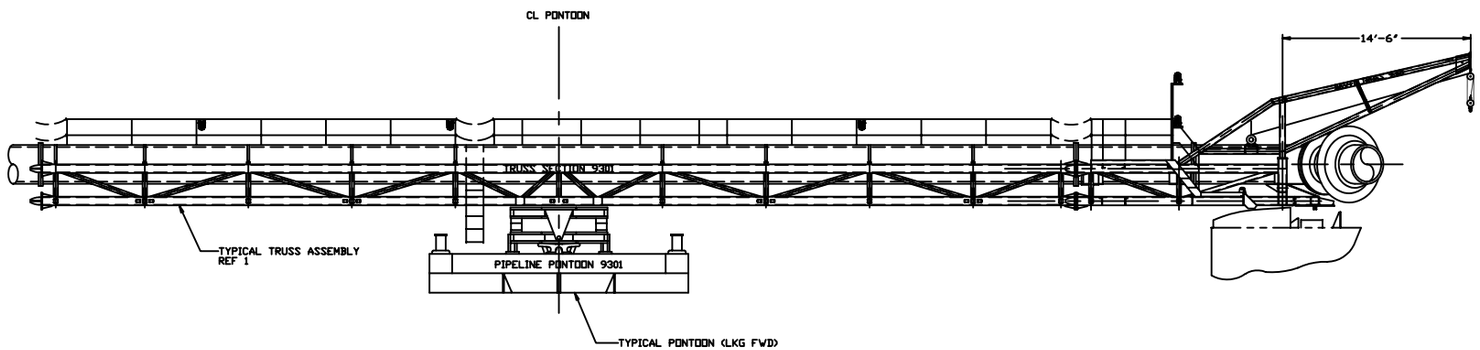

ELEVATION 21-A [1,3]
FIRST PONTOON ASSEMBLY
OUTBOARD PROFILE W/LONGITUDINAL CENTERLINES PERPENDICULAR AS IN NORMAL OPERATION

SIZE	NSC PROJECT NO	DWG NO	REV NO
F	2166	406-D205-01	0
SCALE: 1/4"=1'-0"			SHEET 3 OF 3

406-D205-01 3

CORPS OF ENGINEERS | 7 | 6 | 5 | 4 | 3 | 2 | 1 U. S. ARMY

PARTICULARS

LENGTH	150'-0"
BEAM	48'-0"
DRAFT	2'-6"
DEPTH	9'-0"
HORSE POWER	XXXXX
CONST COST	$ 1,331,565.05
YR DEL	1992

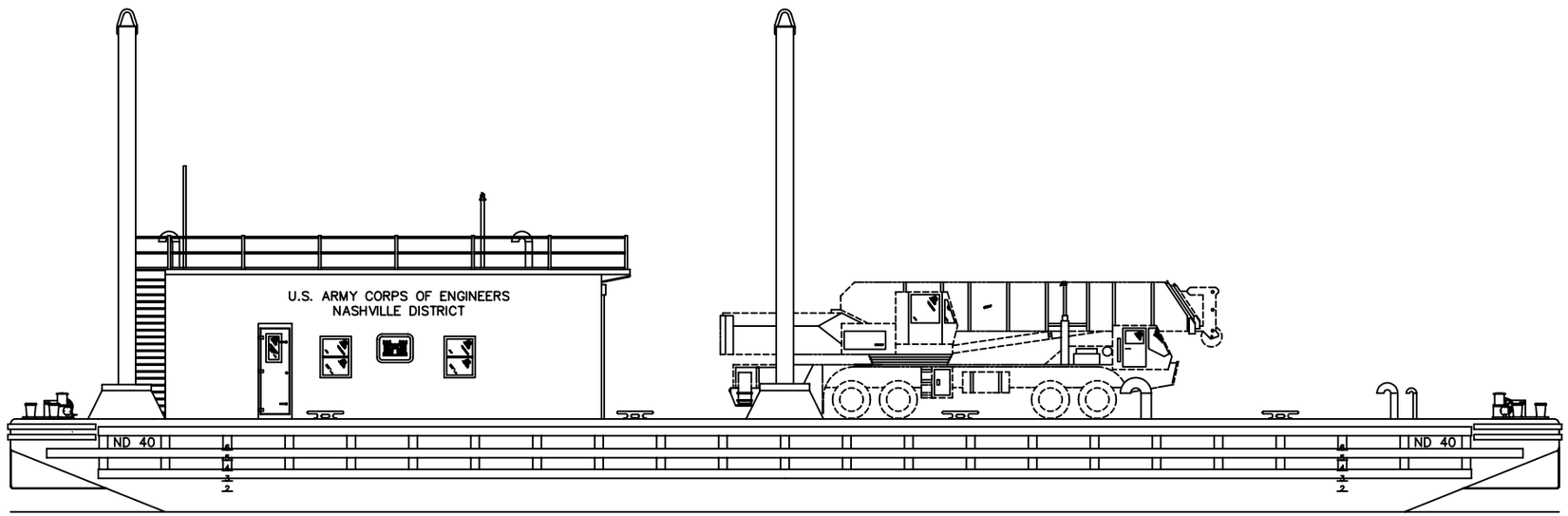

GIBBS & COX, INC. 1235 JEFFERSON DAVIS HIGHWAY ARLINGTON, VIRGINIA 22202	DEPARTMENT OF THE ARMY MARINE DESIGN CENTER CORPS OF ENGINEERS		
CONTRACT NO. DACW 61-86-D-001	ORN SHOP/SPUD BARGE		
DRAWN BY R.P. FULTON / CHKD BY F.M.M. / DATE 5/4/88	OUTBOARD PROFILE		
RELEASED R.P. FULTON			
NO. / APPRVD FOR THE COR & DIRECTOR	SIZE F	PROJECT NO. 2162	DWG. NO. 451-C205-01	REV. C
	SCALE 3/16"=1'-0"	DATE	SHEET 1 OF 1

451-C205-01 C

REVISIONS			
REV	DESCRIPTION	DATE	APPROVED
A	DELETE ANCHOR LIGHT MAST REPLACE EXHAUST GOOSENECK WITH EXHAUST FEN PER MDC LETTER 2162-0208	9/16/91	

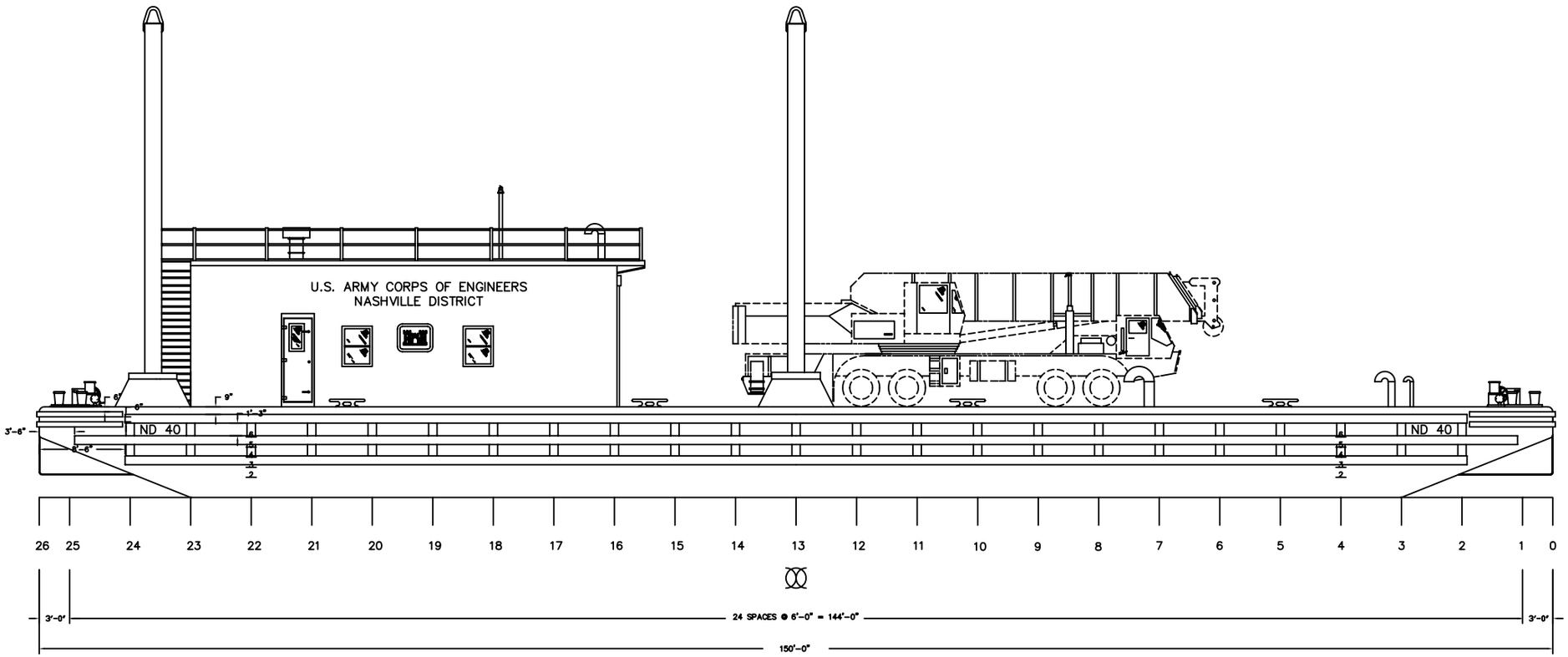

SUPERIOR BOAT WORKS POST OFFICE BOX 8 GREENVILLE, MISSISSIPPI 38702	DEPARTMENT OF THE ARMY MARINE DESIGN CENTER CORPS OF ENGINEERS
CONTRACT NO. DACW61-90-C-0101	ORN SHOP/SPUD BARGE
DRAWN BY BPC; CHK'D BY EAM; DATE 5/4/88	OUTBOARD PROFILE
RELEASED C.E. BRENT	
NO. APPRVD FOR THE CDR & DIRECTOR	SIZE D; PROJECT NO. 2162; DWG. NO. 451-D205-01; REV. A
	SCALE 3/16"=1'-0"; DATE; SHEET 1 OF 1

C 451-D205-01

CORPS OF ENGINEERS

U. S. ARMY

REVISIONS			
REV	DESCRIPTION	DATE	APPROVED
A	FOLLOWING MODIFICATIONS IAW ABS LETTER T-8-2 DATED 18 JAN 91 MOVED, RESIZED SOFT PATCHES MOVED SWBD AND AIR COMPRESSOR MOVED 12" AIR INLET 3" TO PORT	3/4/91	WWR
B	ADD RUBBER PADS, DRILL WELL	3/23/92	
C	Rotate Air Compressor & Air Dryer. Bilge/ Ballast Pump, Switchboard. Relocate Gen Exhaust	4/6/92	MM

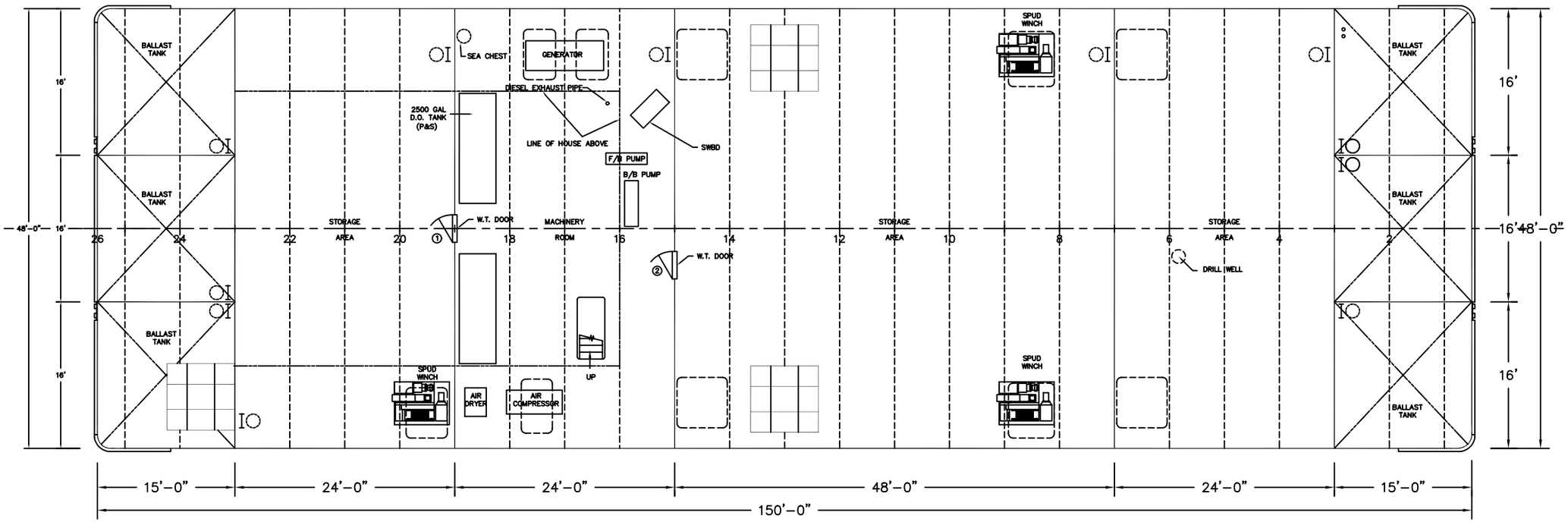

HOLD

D

451-D215-01

SUPERIOR BOAT WORKS POST OFFICE BOX 8 GREENVILLE, MISSISSIPPI 38702	DEPARTMENT OF THE ARMY MARINE DESIGN CENTER CORPS OF ENGINEERS
CONTRACT NO. DACW61-90-C-0101	ORN SHOP/SPUD BARGE
DRAWN BY BPC; CHK'D BY EAM; DATE 5/4/88	GENERAL ARRANGEMENTS
RELEASED C.E. BRENT	
NO. APPRVD FOR THE CDR & DIRECTOR	SIZE D; PROJECT NO. 2162; DWG. NO. 451-D215-01; REV. C
	SCALE 3/16"=1'-0"; DATE; SHEET 1 of 2

REVISIONS			
REV	DESCRIPTION	DATE	APPROVED
A	ADD CORNER WRAP RUBBER PADS	1/20/92	
B	ADD 10" CENTER RUBBER PADS CORRECT MODEL # FOR CLOSED CHOCKS ADD DRILL WELL	3/23/92	
C	MOVE GEN EXHAUST, RELOCATE SOFT PATCHES, CHANGE OVERHEAD DOOR, RAISED WT HATCHES, CO2 BOTTLES	4/6/92	

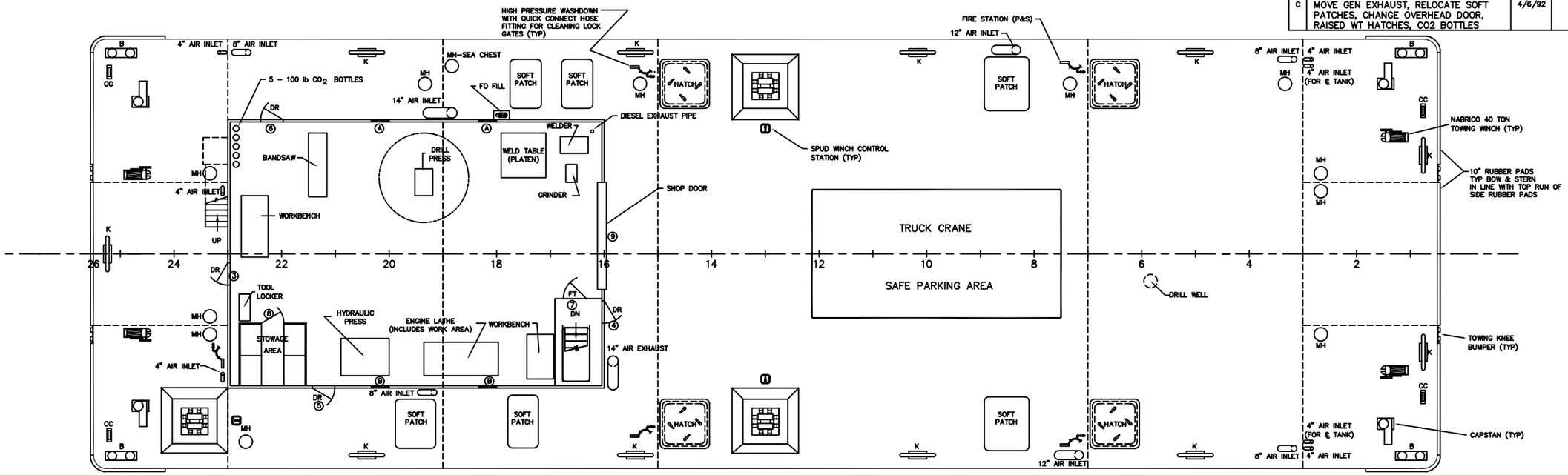

MAIN DECK

MH - MANHOLE	18" STANDARD "FLUSH WATERTIGHT HATCH" BARGE MANHOLE FRAME & COVER. NABRICO TYPE DF-430-18D W/ ESCAPE HANDLE. SEA CHEST - HATCH ONLY.
K - KEVEL	48" CAST KEVEL CHOCK NABRICO TYPE DF-484
B - BITT	10" CAST STEEL DOUBLE BITT NABRICO TYPE DF-40
DR - DOOR	30"x72" WEATHERTIGHT DOOR (NO DOGS) WITH KNOB AND MORTISE LOCK & 14"x30" WINDOW. KEARFOTT MODEL NO. KS 20005
FT - DOOR	30"x72" FUME-TIGHT DOOR (SELF CLOSING) KEARFOTT MODEL NO. KS 20002
HATCH	60"x60"x12" RAISED WATERTIGHT HATCH SPRING LOADED WITH DOGS CENTEX DWG 214, ABS CLASS COVER
CC - CLOSED CHOCK	12" CAST STEEL CLOSED CHOCK NABRICO TYPE DF-480
SHOP DOOR	12'x9' INSULATED WEATHERTIGHT ROLL UP DOOR. OVERHEAD DOOR BRAND MODEL UFN1

D 451-D215-01

RELEASED				
NO.	SIZE	PROJECT NO.	DWG. NO.	REV.
APPRVD FOR THE CDR & DIRECTOR	D	2162	451-D215-01	C
	SCALE 3/16"=1'-0"	DATE	SHEET 2 of 2	

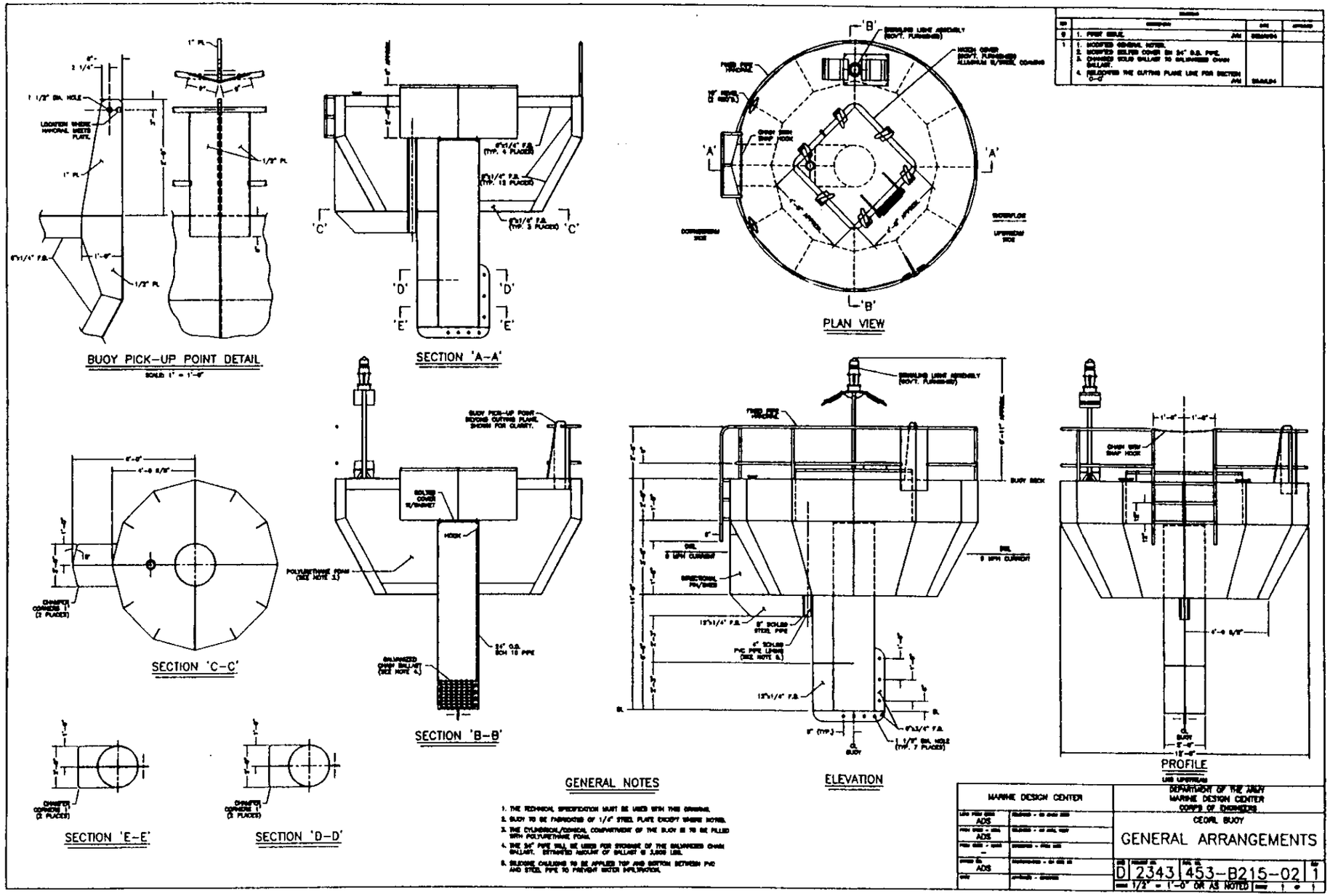
BUOY PICK-UP POINT DETAIL
SCALE: 1" = 1'-0"
SECTION 'A-A'
PLAN VIEW
SECTION 'C-C'
SECTION 'B-B'
ELEVATION
PROFILE
SECTION 'E-E'
SECTION 'D-D'
GENERAL NOTES
1. THE TECHNICAL SPECIFICATION MUST BE USED WITH THIS DRAWING.
2. BUOY TO BE FABRICATED OF 1/4" STEEL PLATE EXCEPT WHERE NOTED.
3. THE CYLINDRICAL/CONICAL COMPARTMENT OF THE BUOY IS TO BE FILLED WITH POLYURETHANE FOAM.
4. THE 24" PIPE WILL BE USED FOR STORAGE OF THE GALVANIZED CHAIN BALLAST. ESTIMATED AMOUNT OF BALLAST IS 3,000 LBS.
5. SLIDING CHALKING TO BE APPLIED TOP AND BOTTOM BETWEEN PVC AND STEEL PIPE TO PREVENT WATER INFILTRATION.
MARINE DESIGN CENTER
ADS
DEPARTMENT OF THE ARMY
MARINE DESIGN CENTER
CORPS OF ENGINEERS
CEORL BUOY
GENERAL ARRANGEMENTS
D 2343
453-B215-02
1
1/2" = 1'-0" OR AS NOTED

REVISIONS				
ZONE	REV	DESCRIPTION	DATE	APPROVED
	A	INCORPORATED MARINE DESIGN CENTER COMMENTS.	8/23/91	
	B	REVISED PER AS BUILT CONDITION.	8/10/92	

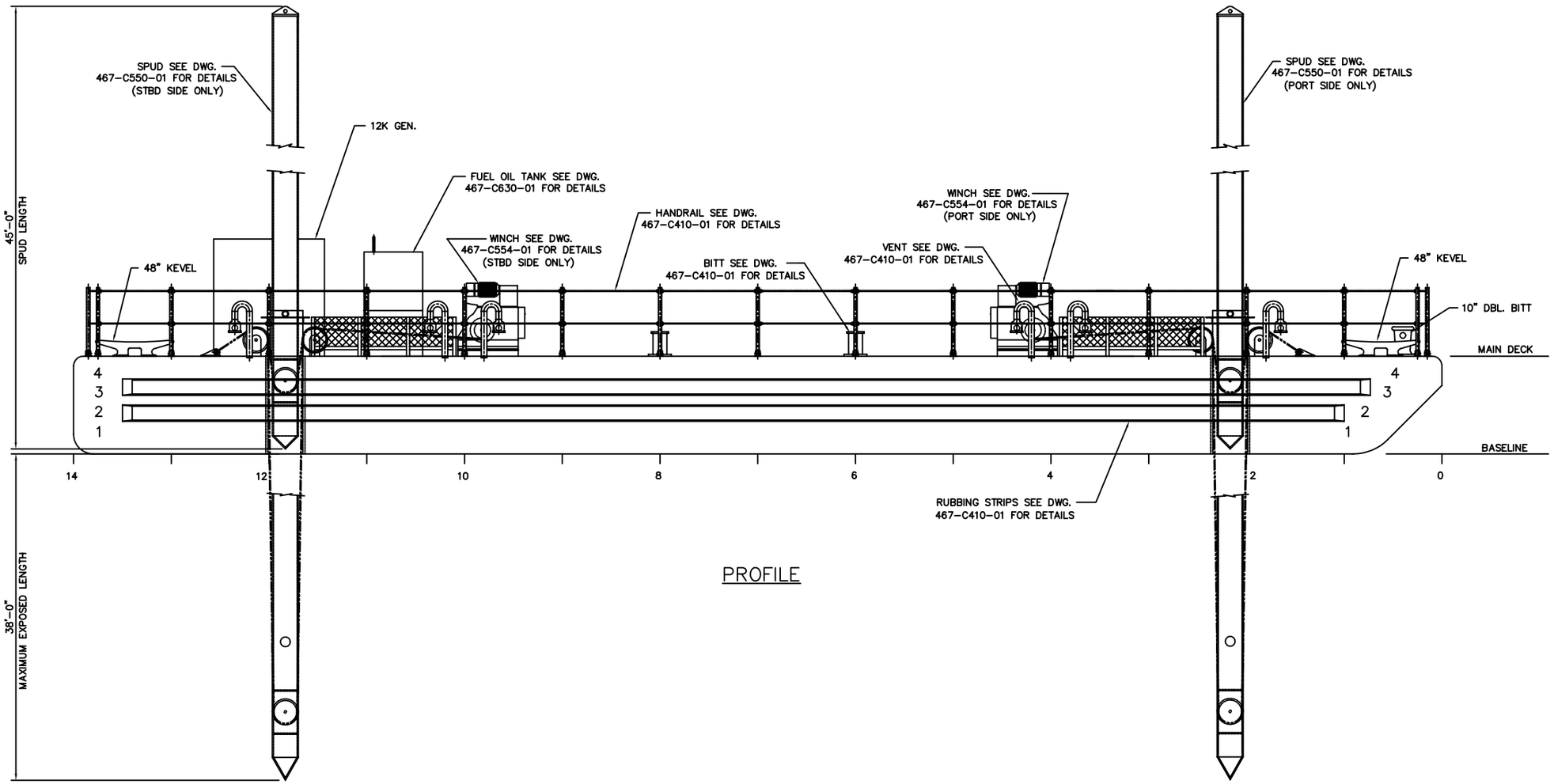

PROFILE

TECHNOLOGY ASSOCIATES	DEPARTMENT OF THE ARMY MARINE DESIGN CENTER CORPS OF ENGINEERS
CONTRACT NO. DACW61-90-C-0070	70'-0" x 30'-0" x 5'-0" BARGE
JOB NO. 2181 / HULL NO. 101	OUTBOARD PROFILE
DRAWN BY GM DATE 6/06/91	
CHECKED BY RTF DATE 6/06/91	
APPD BY DATE	SIZE D / U.S.A.C.E. HULL NO. 467 / U.S.A.C.E. DWG. NO. 467-C205-01 / REV B
APPD A.E.E. DATE	SCALE 3/8" = 1'-0" / TECH. ASSOC. DWG. NO. / SHEET 1 OF 1
APPD N.S.C. D. L. HORTON DATE 7/23/91	

467-C205-01 REV J

REVISIONS				
ZONE	REV	DESCRIPTION	DATE	APPROVED
	A	INCORPORATED MARINE DESIGN CENTER COMMENTS.	8/23/91	
	B	REVISED PER AS BUILT CONDITION.	8/10/92	

BARGE 9201

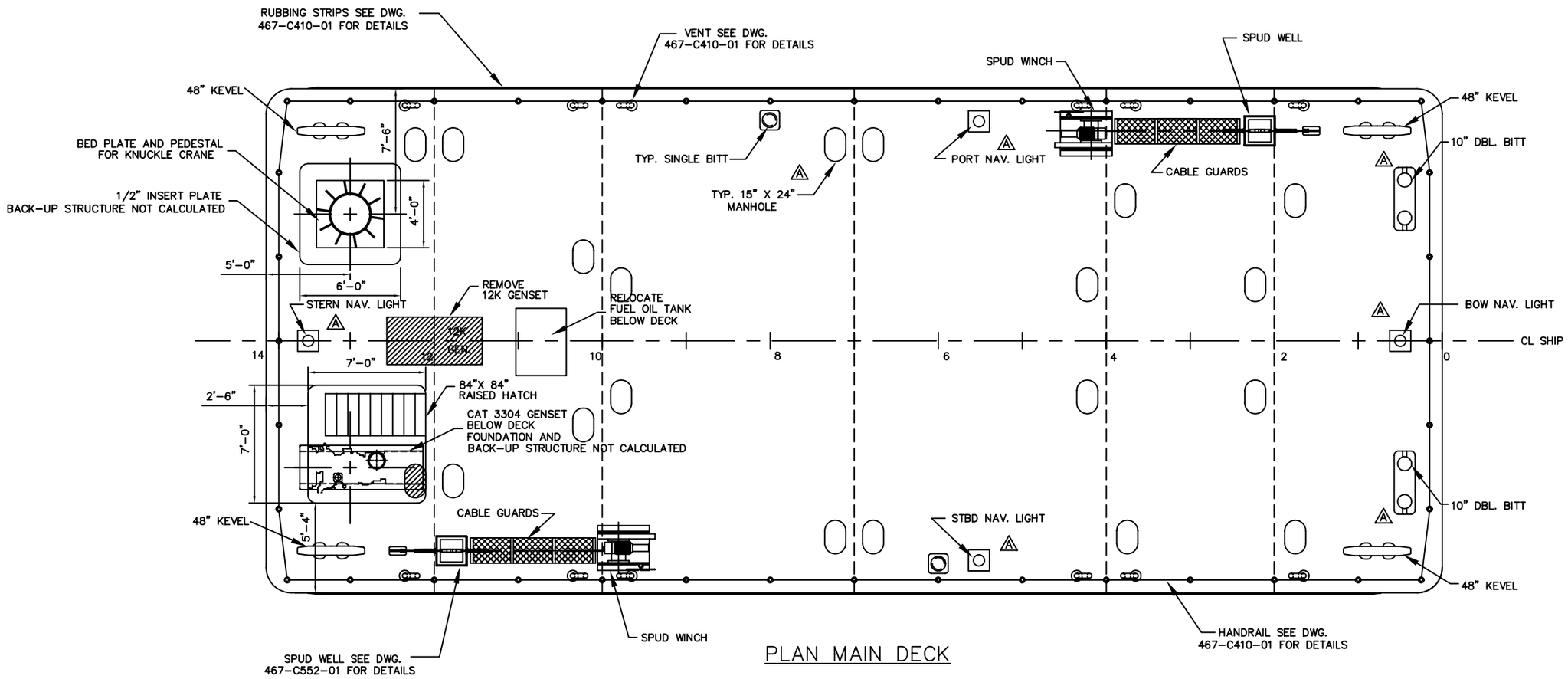

PLAN MAIN DECK

TECHNOLOGY ASSOCIATES	DEPARTMENT OF THE ARMY MARINE DESIGN CENTER CORPS OF ENGINEERS
CONTRACT NO. DACW61-90-C-0070	70'-0" x 30'-0" x 5'-0" BARGE
JOB NO. 2181 / HULL NO. 101	GENERAL ARRANGEMENT
DRAWN BY GM DATE 6/06/91	
CHECKED BY RTF DATE 6/06/91	
APPD BY / DATE	SIZE D / U.S.A.C.E. HULL NO. 467 / U.S.A.C.E. DWG. NO. 467-C215-01 / REV B
APPD ASS. / DATE	SCALE 3/8" = 1'-0" / TECH. ASSOC. DWG. NO. / SHEET 1 OF 1
APPD ASS. D. L. HORTON DATE 7/23/91	

467-C520-01 REV J

DWG. No.	SH.	REV.
500-C205-01	1 of 1	A

REVISIONS

ZONE	REV.	DESCRIPTION	DATE	APPROVED
8-C 3,7-C 3,7-D	A	CHANGE HATCH MANUFACTURER & MODEL MOVE NAME TO PORT FORWARD & STBD AFT AS BUILT	12/18/91	

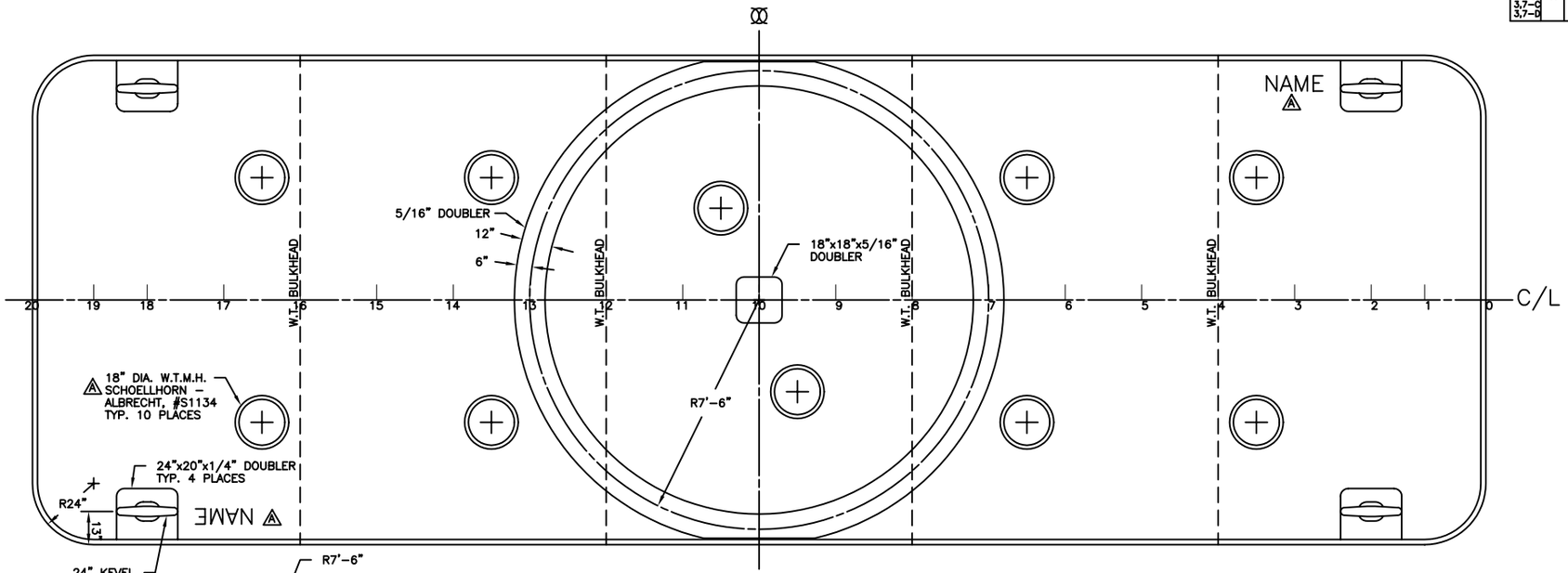

GENERAL ARRANGEMENT

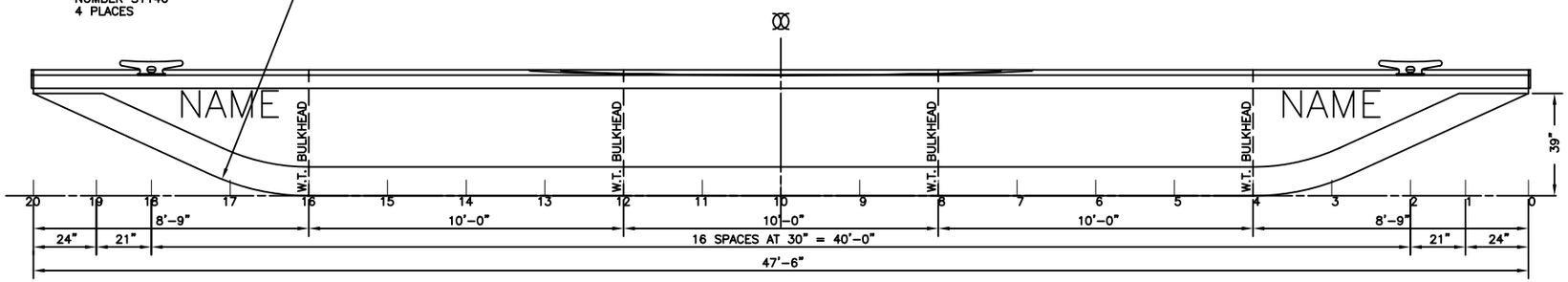

OUTBOARD PROFILE

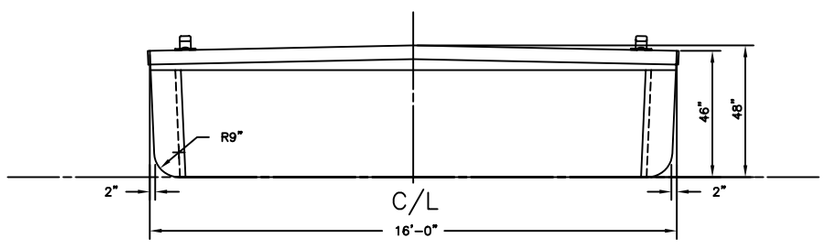

END ELEVATION

VESSEL NAME	MDC HULL No.	BMI HULL No.	VESSEL NAME	MDC HULL No.	BMI HULL No.
9001	500-01	29	9002	500-02	30
9003	500-03	31	9004	500-04	32
9005	500-05	33	9006	500-06	34
9007	500-07	35	9008	500-08	36
9009	500-09	37	9010	500-10	38
9011	500-11	39	9012	500-12	40
9013	500-13	41	9014	500-14	42
9015	500-15	43	9016	500-16	44
9017	500-17	45	9018	500-18	46
9019	500-19	47	9020	500-20	48
9021	500-21	49	9022	500-22	50
9023	500-23	51	9024	500-24	52
9025	500-25	53	9026	500-26	54
9027	500-27	55	9028	500-28	56
9029	500-29	57	9030	500-30	58
9031	500-31	59	9032	500-32	60
9033	500-33	61	9034	500-34	62
9035	500-35	63	9036	500-36	64
9037	500-37	65	9038	500-38	66
9039	500-39	67	9040	500-40	68
9041	500-41	69	9042	500-42	70
9043	500-43	71	9044	500-44	72
9045	500-45	73	9046	500-46	74
9047	500-47	75	9048	500-48	76
9049	500-49	77	9050	500-50	78

BASIC MARINE, INC.
P.O BOX 546
ESCANABA, MI. 49829
(906) 786-7120

DEPARTMENT OF THE ARMY
MARINE DESIGN CENTER
CORPS OF ENGINEERS

BMI HULL Nos. 29-78
DRAWN BY: W.G. HITT
DATE: 30 APR 1991
APPROVED BY:

NCSCO DREDGE PIPELINE PONTOONS
47'-6" x 16'-0" x 3'-10"
OUTBOARD PROFILE AND GENERAL ARRANGEMENT

DACW61-91-C-0023

SIZE	FSCM NUMBER	DRAWING NUMBER	REV.
D		500-C205-01	A

TGMD 90087/801-001

SCALE: 1/2" = 1'-0"
SHEET: 1 OF 1

REVISIONS			
REV	DESCRIPTION	DATE	APPROVED

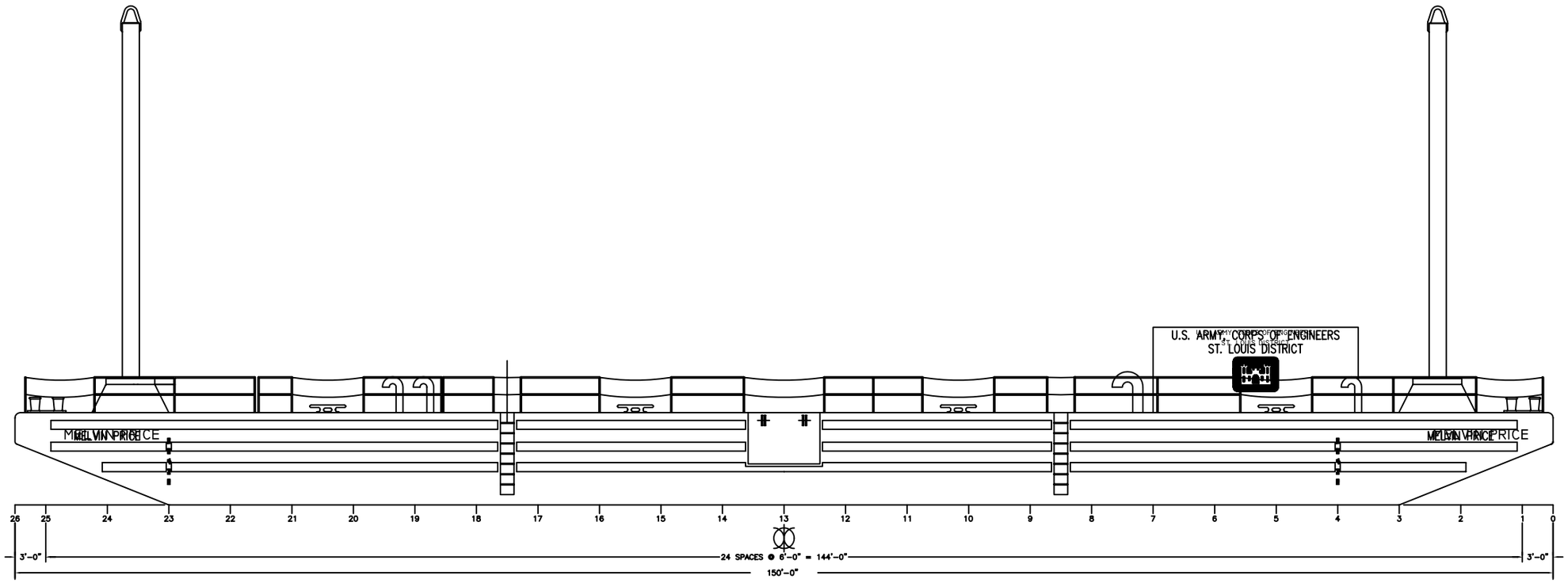

C-7178	536		4174	07259		
NABRICO CONTRACT	MDC HULL	NAME	NABRICO HULL	SHOP ORDER	REQ'N NO.	BILL NO.

MARINE DESIGN CENTER

LEAD PROJ ENGR RGB	RELEASED – CH MACH SECT
PROJ ENGR – HULL RGB	RELEASED – CH HULL SECT
PROJ ENGR – MACH —	SUBMITTED – PROJ MGR
DRAWN BY: JVM	RECOMMENDED – CH DES BR
DATE	APPROVED – DIRECTOR

DEPARTMENT OF THE ARMY
MARINE DESIGN CENTER
CORPS OF ENGINEERS

CELMS DOCKING BARGE

OUTBOARD PROFILE

SIZE	PROJECT NO.	DWG. NO.	REV
D	2321	536-D205-01	0

SCALE 3/16" = 1'-0" SHEET 1 OF 1

REVISIONS			
REV	DESCRIPTION	DATE	APPROVED

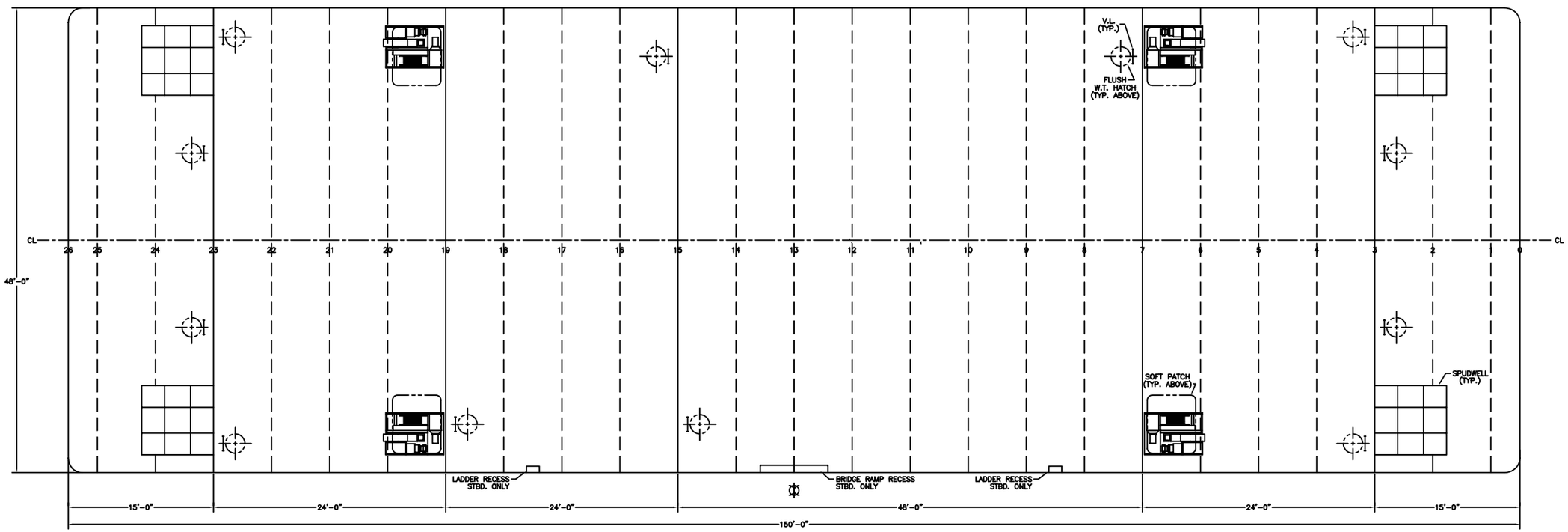

HOLD

NOTE:
THE SPUD WINCHES AND SPUD WINCH CONTROL STANDS SHOWN ARE NOT INCLUDED IN THIS CONTRACT AND ARE FOR FUTURE REFERENCE.

NABRICO CONTRACT	MDC HULL	NAME	NABRICO HULL	SHOP ORDER	REQ'N NO.	BILL NO.
C-7178	536		4174	07259		

MARINE DESIGN CENTER

LEAD PROJ ENGR RGB	RELEASED – CH MACH SECT
PROJ ENGR – HULL RGB	RELEASED – CH HULL SECT
PROJ ENGR – MACH —	SUBMITTED – PROJ MGR
DRAWN BY: JVM	RECOMMENDED – CH DES BR
DATE	APPROVED – DIRECTOR

DEPARTMENT OF THE ARMY
MARINE DESIGN CENTER
CORPS OF ENGINEERS

CELMS DOCKING BARGE

GENERAL ARRANGEMENT

SIZE	PROJECT NO.	DWG. NO.	REV
D	2321	536–D215–01	0

SCALE 3/16" = 1'-0" SHEET 1 OF 2

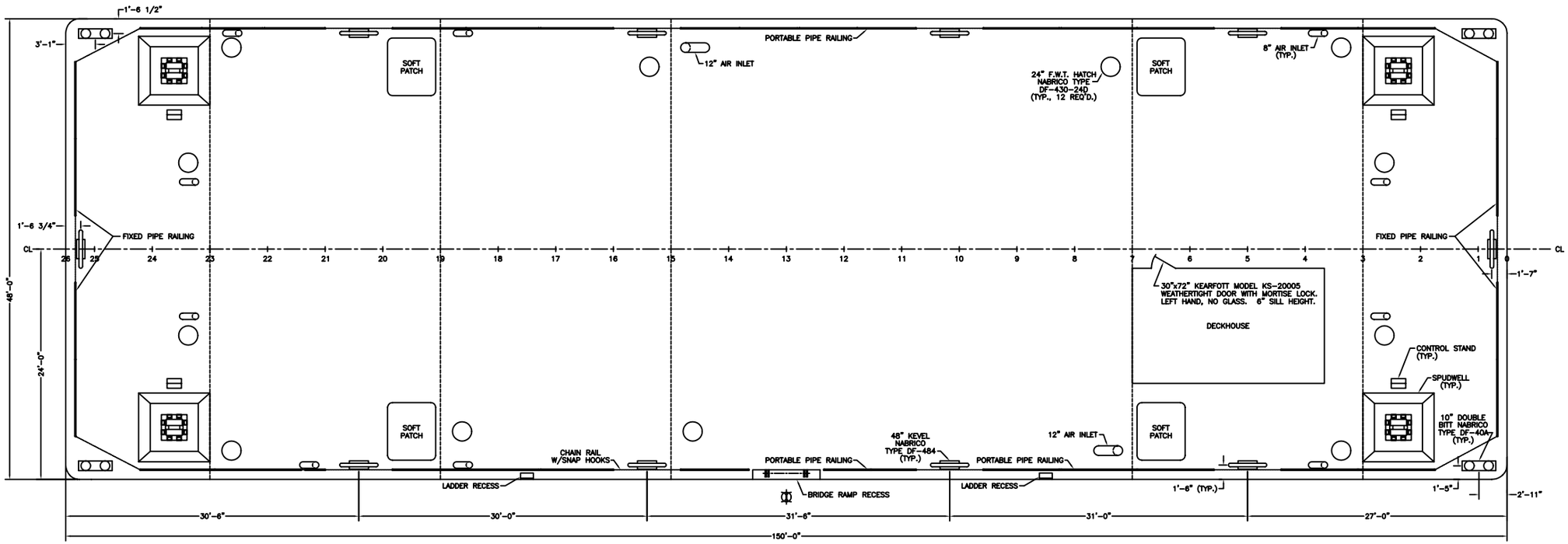

MAIN DECK

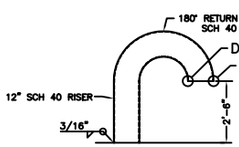

12" VENT

SCALE: 3/8" = 1'-0"
2 REQ'D.
LOCATE AS SHOWN

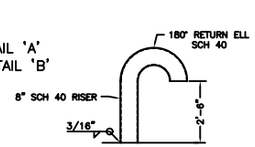

8" VENT

SCALE: 3/8" = 1'-0"
10 REQ'D.
LOCATE AS SHOWN

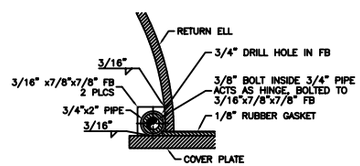

DETAIL 'A'

SCALE: 6" = 1'-0"
TYP. 8" AND 12" VENTS

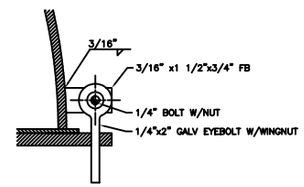

DETAIL 'B'

SCALE: 6" = 1'-0"
TYP. 8" AND 12" VENTS

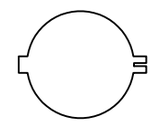

COVER PLATE

SCALE: 1 1/2" = 1'-0"
12" PLATE SHOWN, 8" SIM

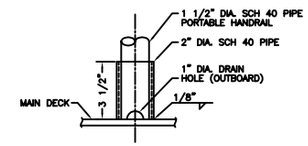

PORTABLE HANDRAIL SOCKET

36 REQUIRED
SCALE: 3" = 1'-0"

C-7178	536		4174	07259			
NABRICO CONTRACT	MOD NUM	NAME	NABRICO DWG	JOB ORDER	RECV'D NUM	BILL NUM	

MARINE DESIGN CENTER

DRAWN JVM

ISSUED

SIZE D | PROJECT NO. 2321 | DWG. NO. 536-D215-01 | REV 0

SCALE 3/16" = 1'-0" | SHEET 2 OF 2

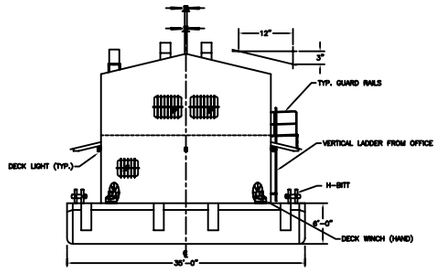

BOW ELEVATION
(AT FR. 0, LKG AFT)

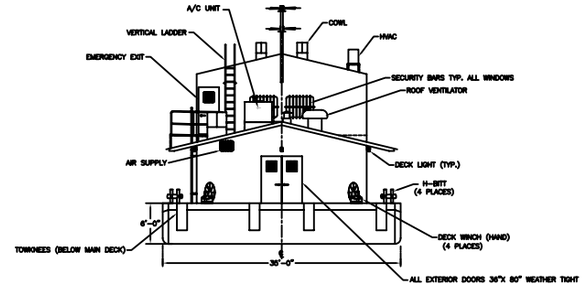

STERN ELEVATION
(AT FR. 23, LKG FWD)

PRINCIPAL CHARACTERISTICS

L.O.A. ..... 150'-0"
BEAM (OVERALL) ..... 35'-0"
DEPTH (MOLDED) ..... 6'-0" (AT SIDE)
CLASSED A.B.S. ✠ A1 BARGE, RIVER SERVICE
WITH REINFORCEMENT "B".

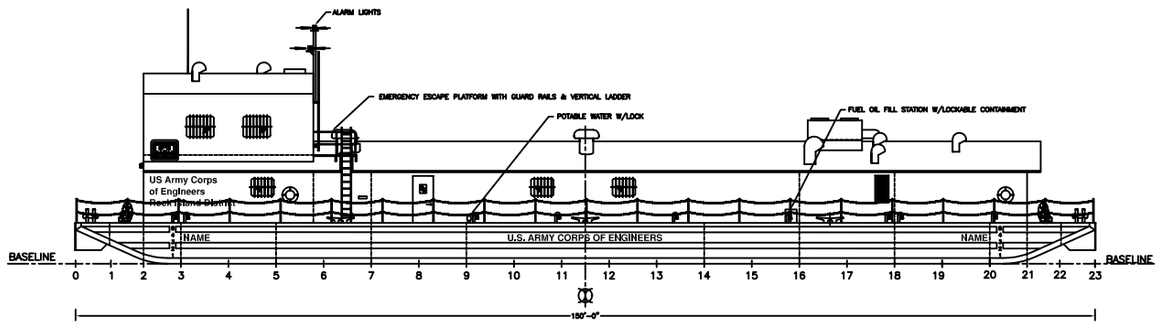

PORT SIDE PROFILE

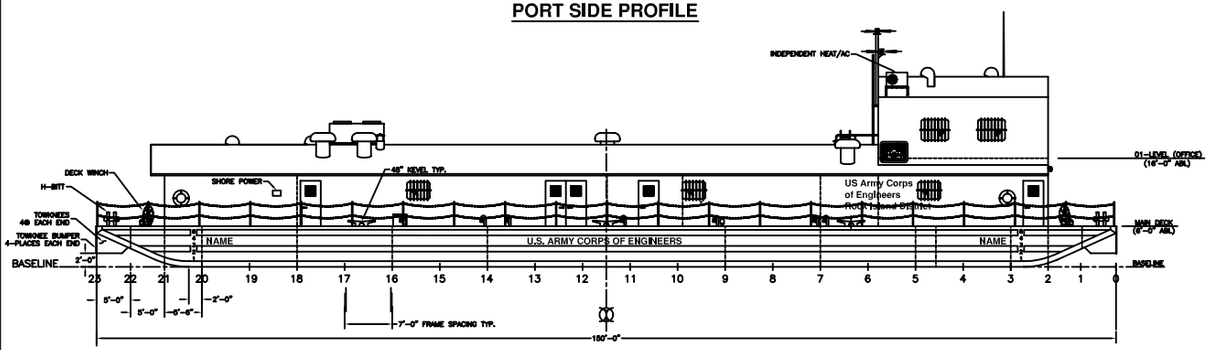

STBD. SIDE PROFILE

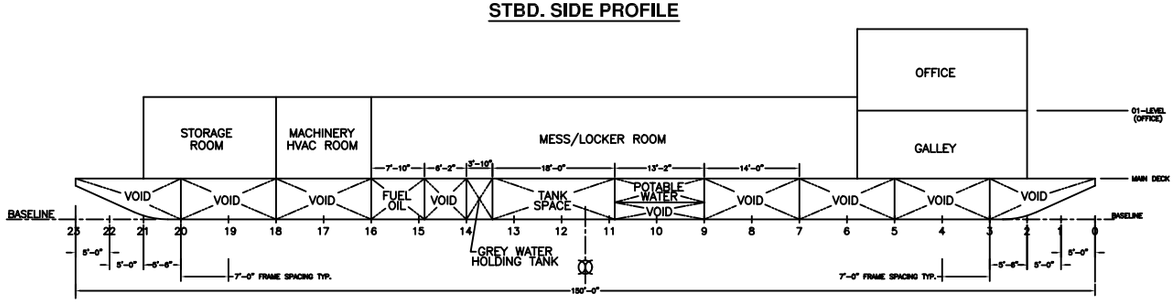

INBOARD PROFILE
(LOOKING TO PORT)

PRELIMINARY

NOTE:
THE TYPE, NUMBER AND LOCATION OF AIR VENTS IS RESERVED PENDING FURTHER DETAIL DEVELOPMENT.

REVISIONS			
REV	DESCRIPTION	BY	DATE

NO.	MDC PLAN NO.	TITLE
		REFERENCES

BUILT BY: MAY SHIP REPAIR CONTRACTING CORP. 3075 RICHMOND TERRACE STATEN ISLAND, NEW YORK 10303

APPROVED BY: DATE:

DESIGNED BY: C.R. CUSHING & CO., INC. 18 VESEY STREET NEW YORK, NEW YORK 10007

DEPARTMENT OF THE ARMY
MARINE DESIGN CENTER
CORPS OF ENGINEERS

US Army Corps of Engineers

CENCR OFFICE BARGE 150' X 35' X 6'
(ROCK ISLAND DISTRICT)
GENERAL ARRANGEMENT
PROFILES AND ELEVATIONS

SIZE D | PROJECT NO. 2320 | DWG. NO. 539-C215-01 | REV. 0

DRAWN BY: VSA DATE: 4/25/99
CHECKED BY: FS DATE: 4/25/99
APPROVED BY DATE:
SCALE 1/8" = 1'-0" SHEET 1 of 3

G:\CAD\PROJECTS\539-C215-01.DWG PLOT SCALE .125=12

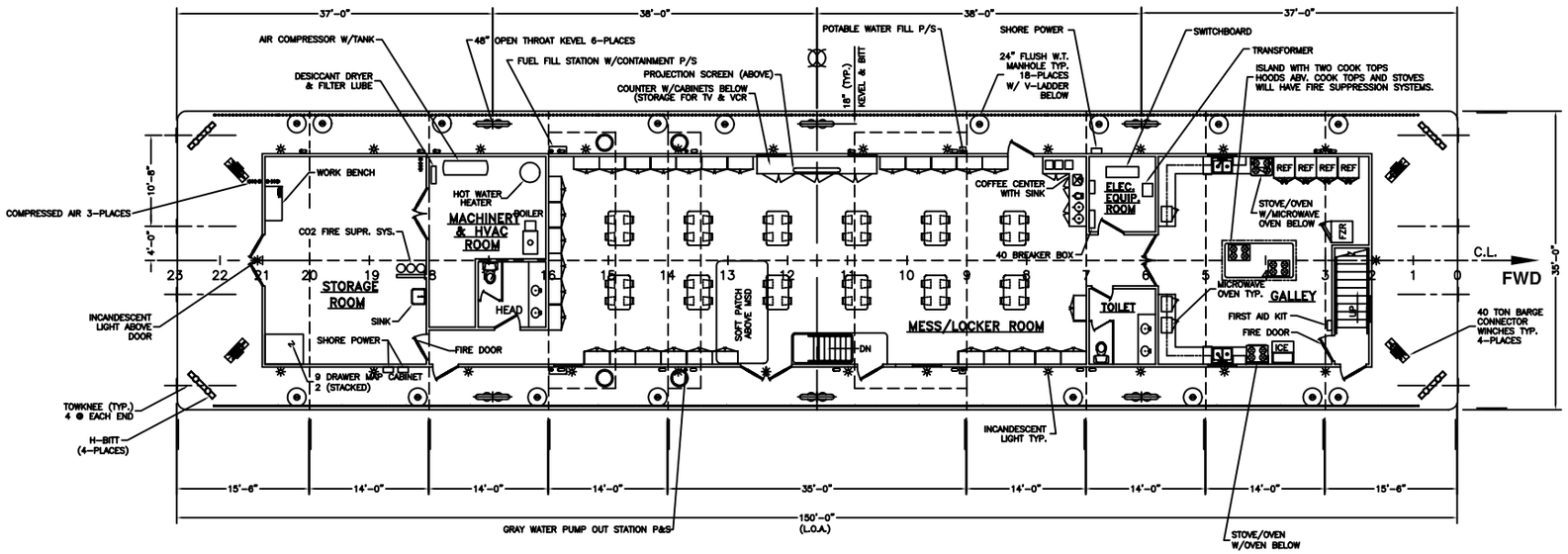

MAIN DECK PLAN VIEW

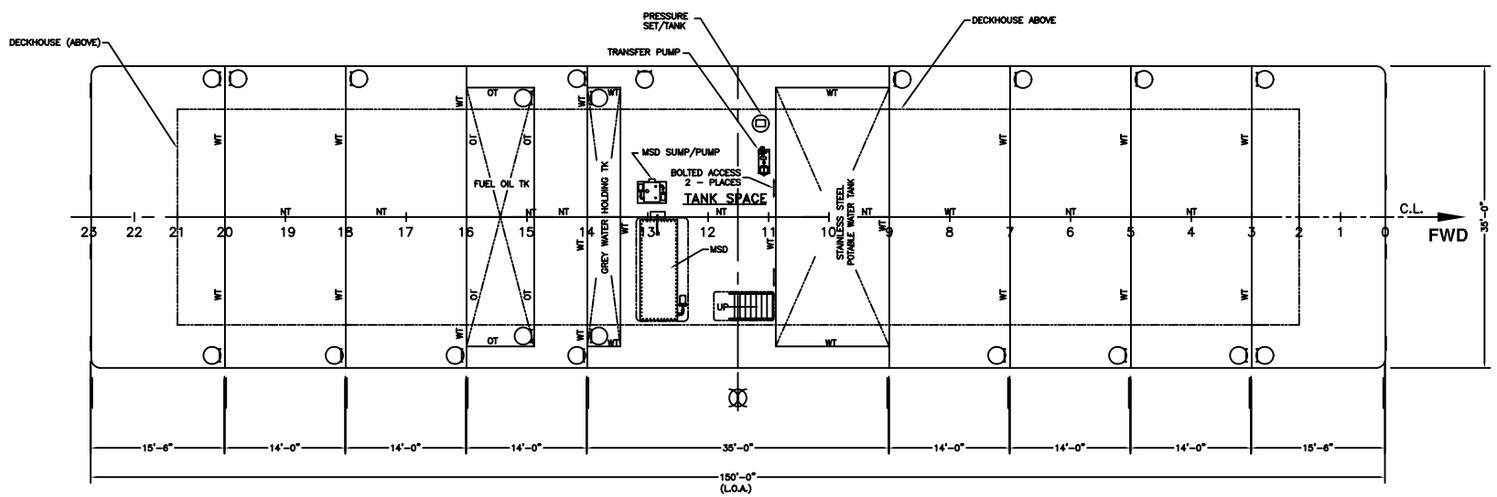

HOLD PLAN VIEW

REVISIONS			
REV	DESCRIPTION	BY	DATE

PRELIMINARY

NO.	MDC PLAN NO.	TITLE
		REFERENCES

BUILT BY: MAY SHIP REPAIR CONTRACTING CORP. 3075 RICHMOND TERRACE STATEN ISLAND, NEW YORK 10303

DEPARTMENT OF THE ARMY
MARINE DESIGN CENTER
CORPS OF ENGINEERS

APPROVED BY: DATE:

DESIGNED BY: C.R. CUSHING & CO., INC. 18 VESEY STREET NEW YORK, NEW YORK 10007

US Army Corps of Engineers

CENCR OFFICE BARGE 150' X 35' X 6'
(ROCK ISLAND DISTRICT)
GENERAL ARRANGEMENT
DECK PLANS

SIZE	PROJECT NO.	DWG. NO.	REV.
D	2320	539-C215-01	0

DRAWN BY:	VSA	DATE:	4/25/99	APPROVED BY MDC:	DATE:
CHECKED BY:	FS	DATE:	4/25/99	SCALE 1/8" = 1'-0"	SHEET 2 OF 3

REVISIONS			
REV	DESCRIPTION	BY	DATE

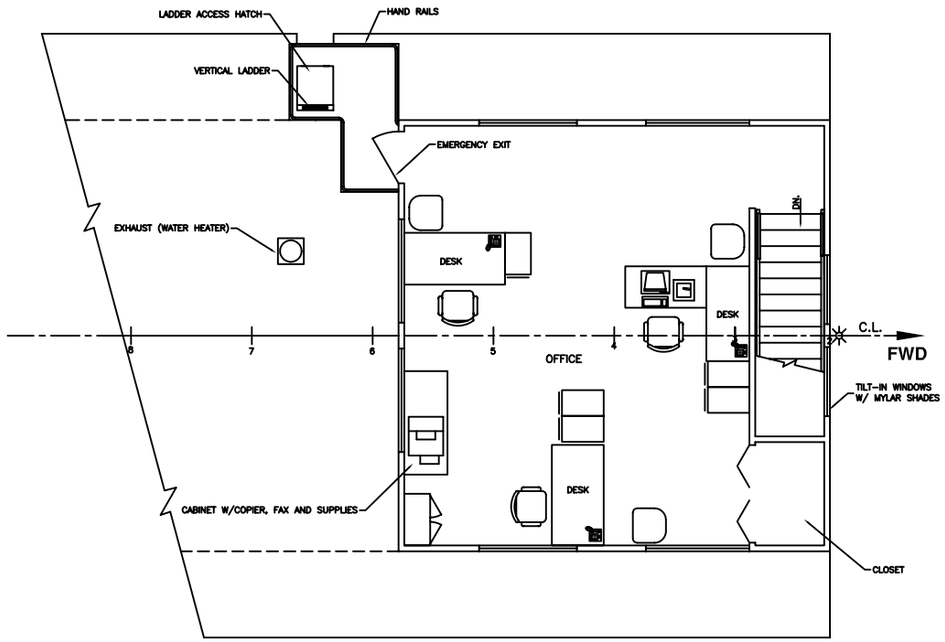

01 LEVEL (OFFICE)

SCALE: 1/4" = 1'-0"

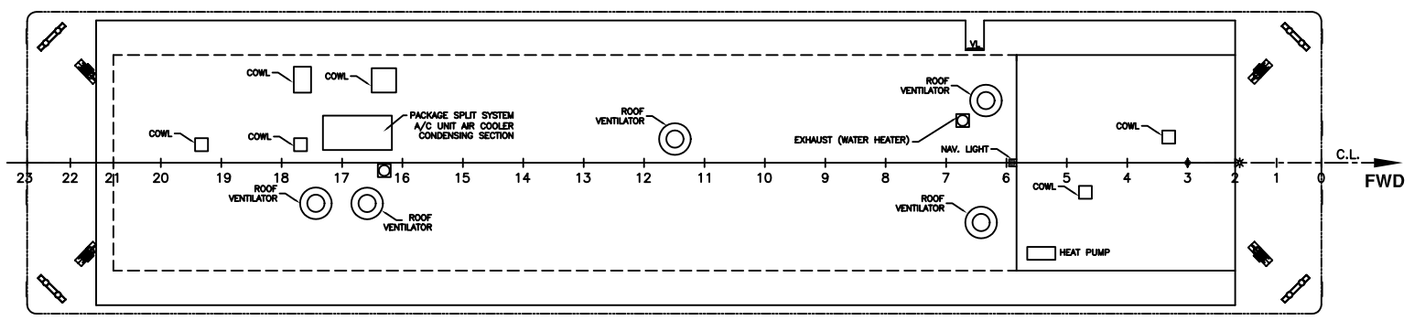

ROOF PLAN VIEW

PRELIMINARY

NO.	MDC PLAN NO.	TITLE
		REFERENCES

BUILT BY: MAY SHIP REPAIR CONTRACTING CORP.
3075 RICHMOND TERRACE
STATEN ISLAND, NEW YORK 10303

APPROVED BY: DATE:

DESIGNED BY: C.R. CUSHING & CO., INC.
18 VESEY STREET
NEW YORK, NEW YORK 10007

DRAWN BY: VSA DATE: 4/25/99

CHECKED BY: FS DATE: 4/25/99

DEPARTMENT OF THE ARMY
MARINE DESIGN CENTER
CORPS OF ENGINEERS

US Army Corps of Engineers

CENCR OFFICE BARGE 150' X 35' X 6'
(ROCK ISLAND DISTRICT)

GENERAL ARRANGEMENT
DECK PLANS

SIZE	PROJECT NO.	DWG. NO.	REV.
D	2320	539-C215-01	0

APPROVED BY MDC: DATE:

SCALE: 1/8" = 1'-0"

SHEET 3 OF 3

REVISIONS			
REV.	DESCRIPTION	DATE	APPROVED
–	AS BUILT	05/01/96	

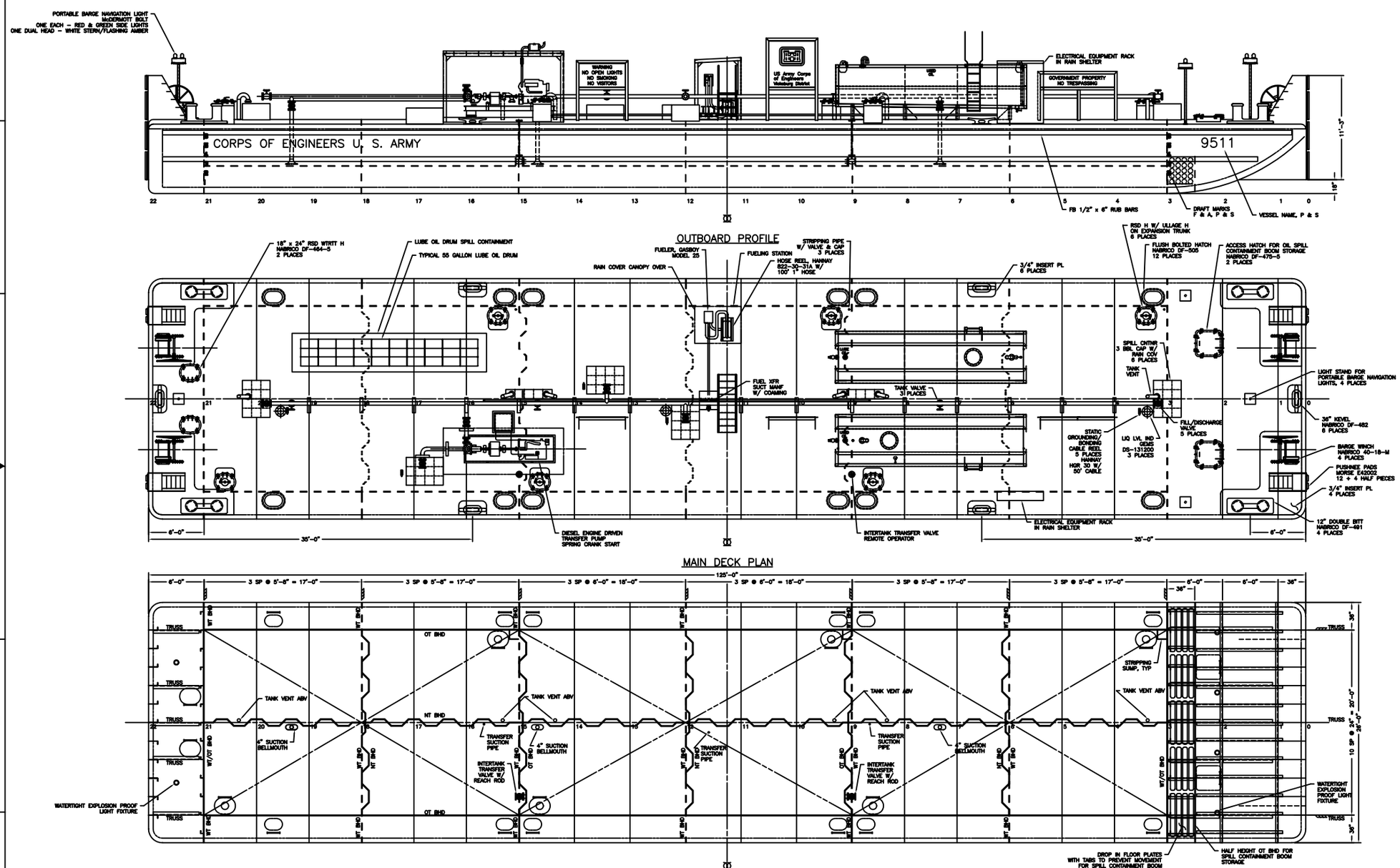

PARTICULARS

LENGTH	125'-0"
BEAM	26'-0"
DEPTH	7'-6"
CAPACITY	~68,600 GAL

FOR VICKSBURG

BASIC MARINE, INC.
P.O. BOX 548
BOONVILLE, IN. 47601
(812) 897-7130

DEPARTMENT OF THE ARMY
MARINE DESIGN CENTER
CORPS OF ENGINEERS

BMI HULL No. 92
DRAWN BY: W.G. HITT
DATE: 01 MAY 1996
APPROVED BY:

CELMK FUEL OIL BARGE
125'-0" x 26'-0" x 7'-6"
GENERAL ARRANGEMENT

DACW61-94-C-0057

TGMD 94077/801-201

SIZE	MDC PROJECT	DRAWING NUMBER	REV.
F	2348	544-D215-01	–

SCALE: 1/4" = 1'-0"
SHEET: 1 OF 1

DRAWING NUMBER 2348 544-D215-01 REV –

REVISIONS			
REV	DESCRIPTION	DATE	APPROVED
0	1. FIRST ISSUE. JVM	15NOV94	

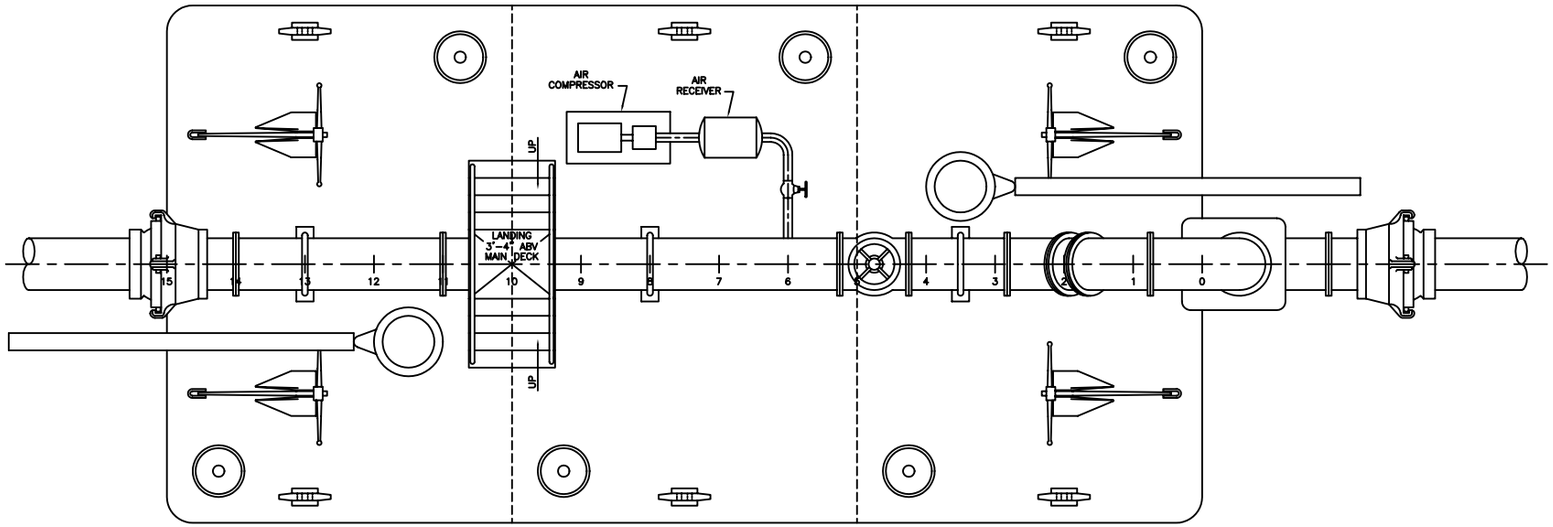

MAIN DECK PLAN

~ PARTICULARS ~

MOLDED

MIN. LENGTH	30'-0"
MIN. BEAM	15'-0"
APPROX. DEPTH	4'-0"

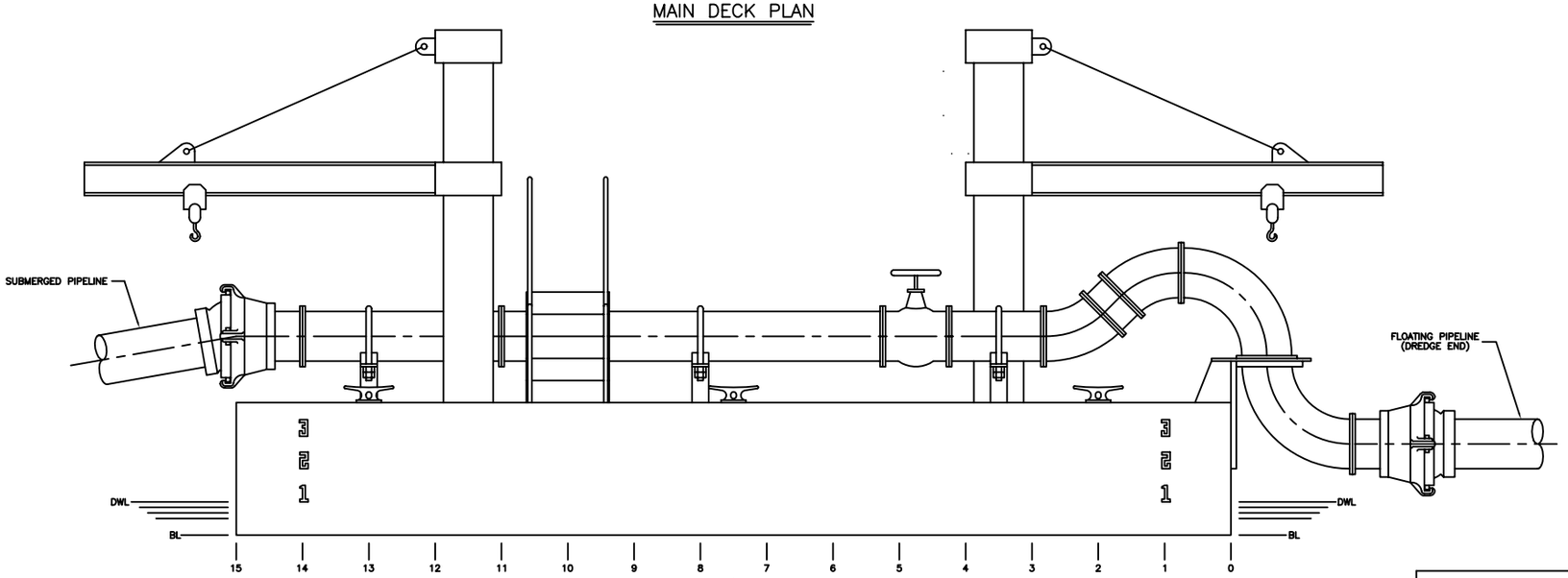

OUTBOARD PROFILE

MARINE DESIGN CENTER	
LEAD PROJ ENGR HWW	RELEASED – CH MACH SECT
PROJ ENGR – HULL —	RELEASED – CH HULL SECT
PROJ ENGR – MACH HWW	SUBMITTED – PROJ MGR
DRWN BY: JVM	RECOMMENDED – CH DES BR
DATE	APPROVED – DIRECTOR

DEPARTMENT OF THE ARMY
MARINE DESIGN CENTER
CORPS OF ENGINEERS

SANTA BARBARA ANCHOR BARGE

GENERAL ARRANGEMENTS

SIZE	PROJECT NO.	DWG. NO.	REV
D	2304	547–B215–01	0

SCALE NOT TO SCALE SHEET 1 OF 1

REVISIONS			
REV	DESCRIPTION	DATE	APPROVED
A	1. REMOVED ALL STEEL PIPE FWD. OF FR. 3. 2. EXTENDED STEEL HORIZONTAL STEEL PIPE FROM FR. 3 FWD. TO FR. 1/2. 3. ADDED ONE PIPE SUPPORT AT FRAME 1. 4. ADDED FLEXIBLE HOSE FWD. OF FR. 1/2. 5. REMOVED JIB CRANE FROM FR. 3 1\2 PORT.	13SEP95	FAIL

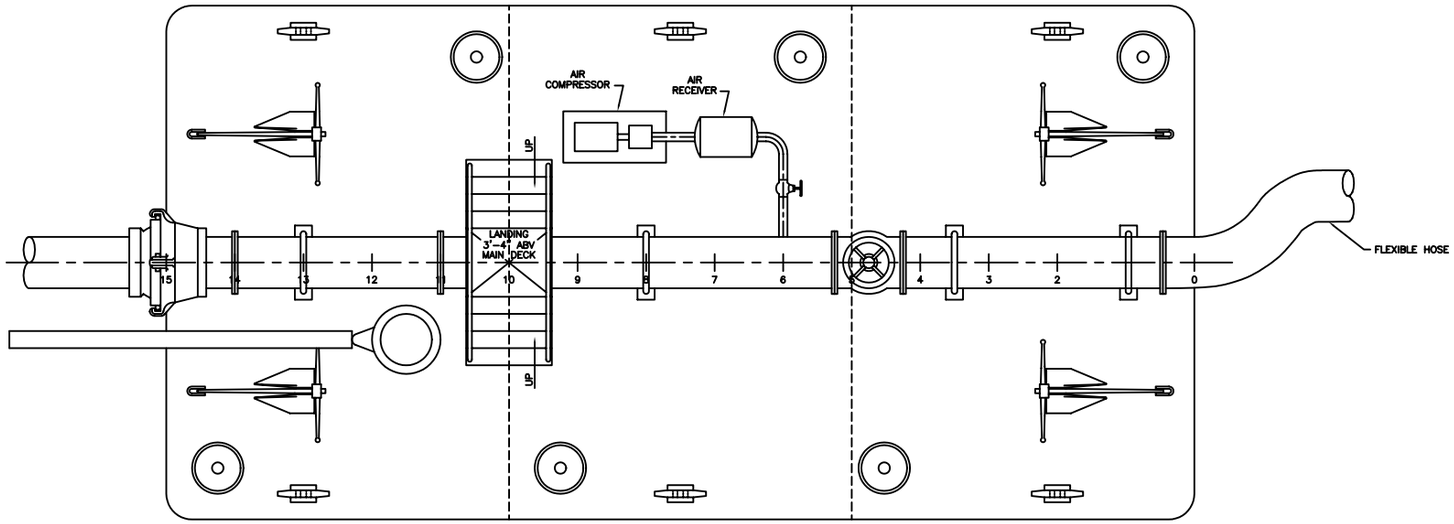

MAIN DECK PLAN

~ PARTICULARS ~

MOLDED

MIN. LENGTH ..... 30'-0"

MIN. BEAM ..... 15'-0"

APPROX. DEPTH ..... 4'-0"

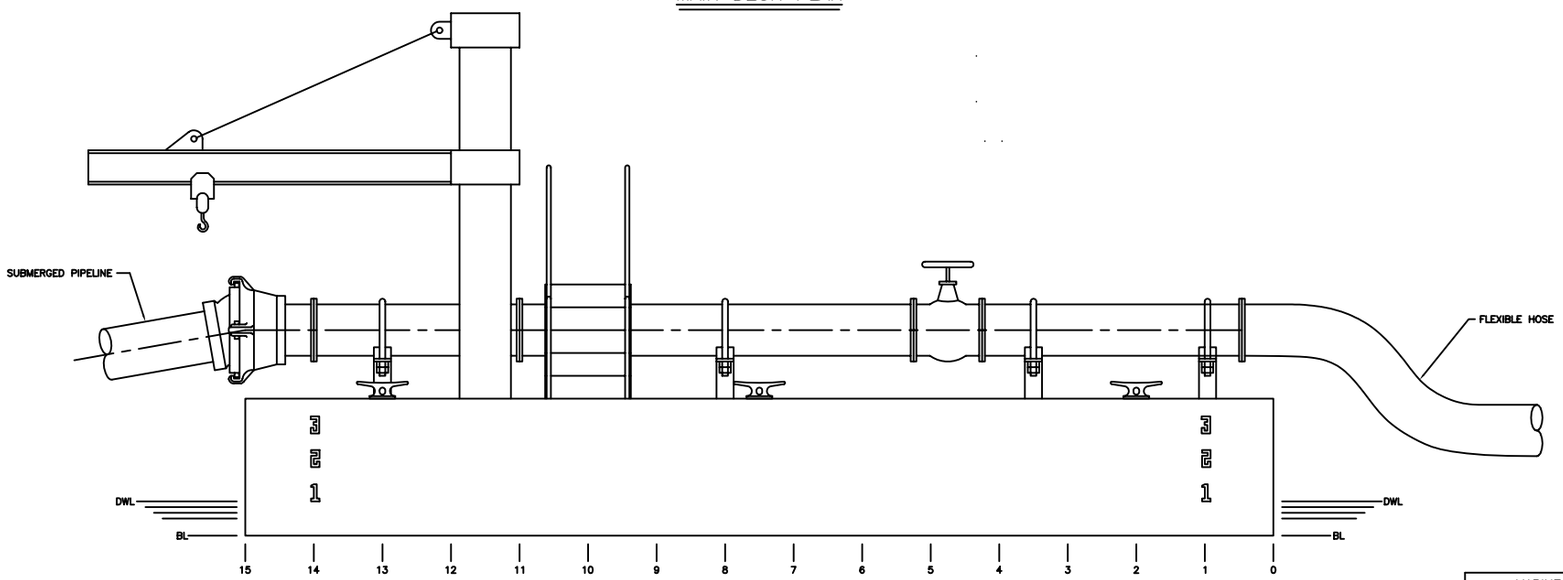

OUTBOARD PROFILE

MARINE DESIGN CENTER PHILADELPHIA, PA	
LEAD PROJ ENGR HWW	RELEASED – CH MACH SECT
PROJ ENGR – HULL —	RELEASED – CH HULL SECT
PROJ ENGR – MACH HWW	SUBMITTED – PROJ MGR
DRAWN BY: JVM	RECOMMENDED – CH DES BR
DATE	APPROVED – DIRECTOR

DEPARTMENT OF THE ARMY
MARINE DESIGN CENTER
CORPS OF ENGINEERS

US Army Corps of Engineers

SANTA BARBARA ANCHOR BARGE

GENERAL ARRANGEMENTS

SIZE	PROJECT NO.	DWG. NO.	REV
D	2304	547-B215-01	A

SCALE NOT TO SCALE SHEET 1 OF 1

PLOT SCALE .5=12

REVISIONS			
REV	DESCRIPTION	DATE	APPROVED
A	1. REMOVED ALL STEEL PIPE FWD. OF FR. 3. 2. EXTENDED STEEL HORIZONTAL STEEL PIPE FROM FR. 3 FWD. TO FR. 1/2. 3. ADDED ONE PIPE SUPPORT AT FRAME 1. 4. ADDED FLEXIBLE HOSE FWD. OF FR. 1/2. 5. REMOVED JIB CRANE FROM FR. 3 1\2 PORT.	13SEP95	J. B. FAIL
B	1. REPLACED JIB CRANE AT FR. 3 1/2 PORT. 2. REPLACED 200 LB. ANCHORS WITH 1000 LB ANCHORS AND ADDED DUNNAGE. 2. ADDED HAND WINCHES AND CHOCKS.	12DEC95	J. B. FAIL

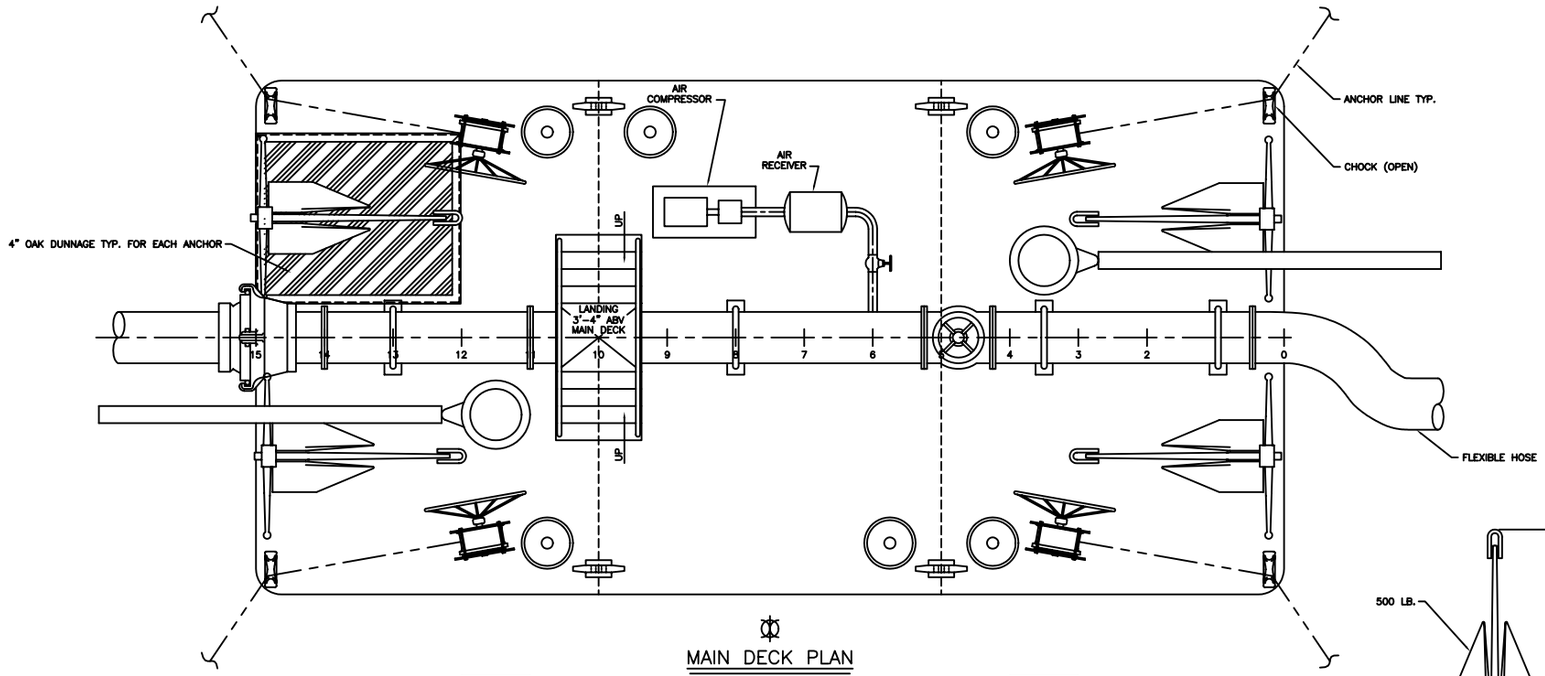

MAIN DECK PLAN

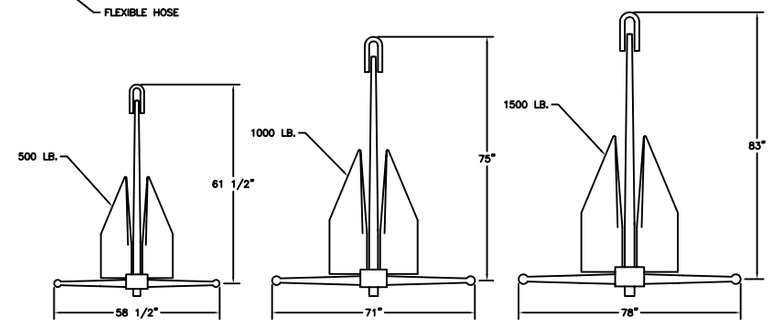

ANCHORS

500 LB. ANCHOR SHOWN IN PLAN VIEW.
1000 LB. ANCHOR AND 1500 LB. ANCHOR SHOWN ABOVE CAN BE USED BUT WILL LIMIT DECK SPACE.

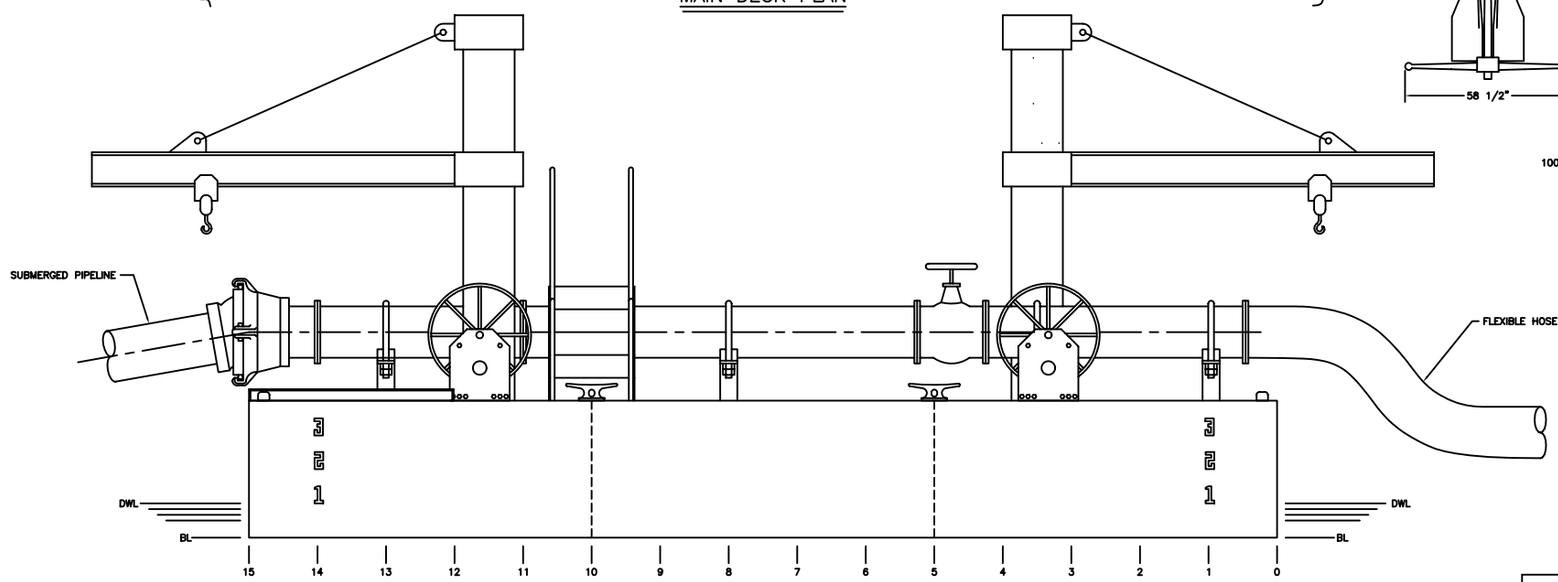

OUTBOARD PROFILE

~ PARTICULARS ~

MOLDED

MIN. LENGTH	30'-0"
MIN. BEAM	15'-0"
DEPTH	4'-0"

MARINE DESIGN CENTER PHILADELPHIA, PA	
LEAD PROJ ENGR HWW	RELEASED – CH MACH SECT
PROJ ENGR – HULL —	RELEASED – CH HULL SECT
PROJ ENGR – MACH HWW	SUBMITTED – PROJ MGR
DRAWN BY: JVM	RECOMMENDED – CH DES BR
DATE	APPROVED – DIRECTOR

DEPARTMENT OF THE ARMY
MARINE DESIGN CENTER
CORPS OF ENGINEERS

US Army Corps of Engineers

SANTA BARBARA ANCHOR BARGE

GENERAL ARRANGEMENTS

SIZE	PROJECT NO.	DWG. NO.	REV
D	2304	547-B215-01	B

SCALE NOT TO SCALE SHEET 1 OF 1

PLOT SCALE .5=12

REVISIONS			
REV	DESCRIPTION	DATE	APPROVED
A	1. RESIZED AND RELOCATED THE CABLE REEL. 2. ADDED A TRANSFORMER ON AFT. END. 3. ADDED CABLE GUIDES AND LEVEL WIND MECHANISM. 4. CHANGED LOCATION OF HAND WINCHES. 5. CHANGED LOCATION OF THE AFT. MANHOLES. 6. CHANGED LOCATION OF THE AFT. KEVELS.	29AUG95	FAIL

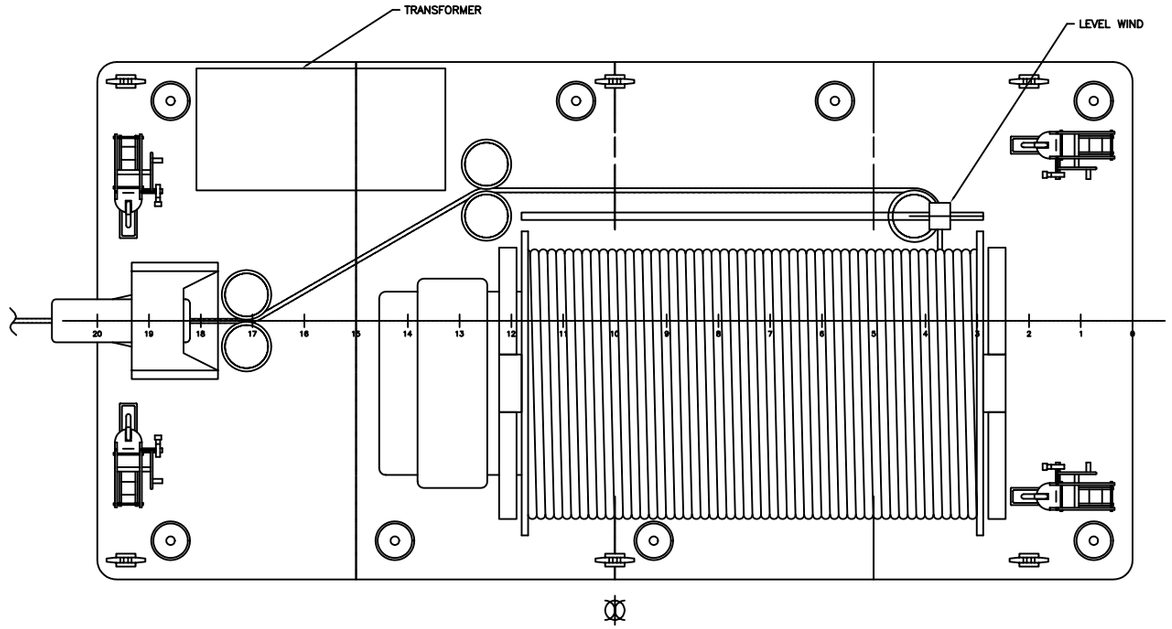

A MAIN DECK PLAN

~ PARTICULARS ~

MOLDED

LENGTH	40'-0"
BEAM	20'-0"
DEPTH	4'-0"

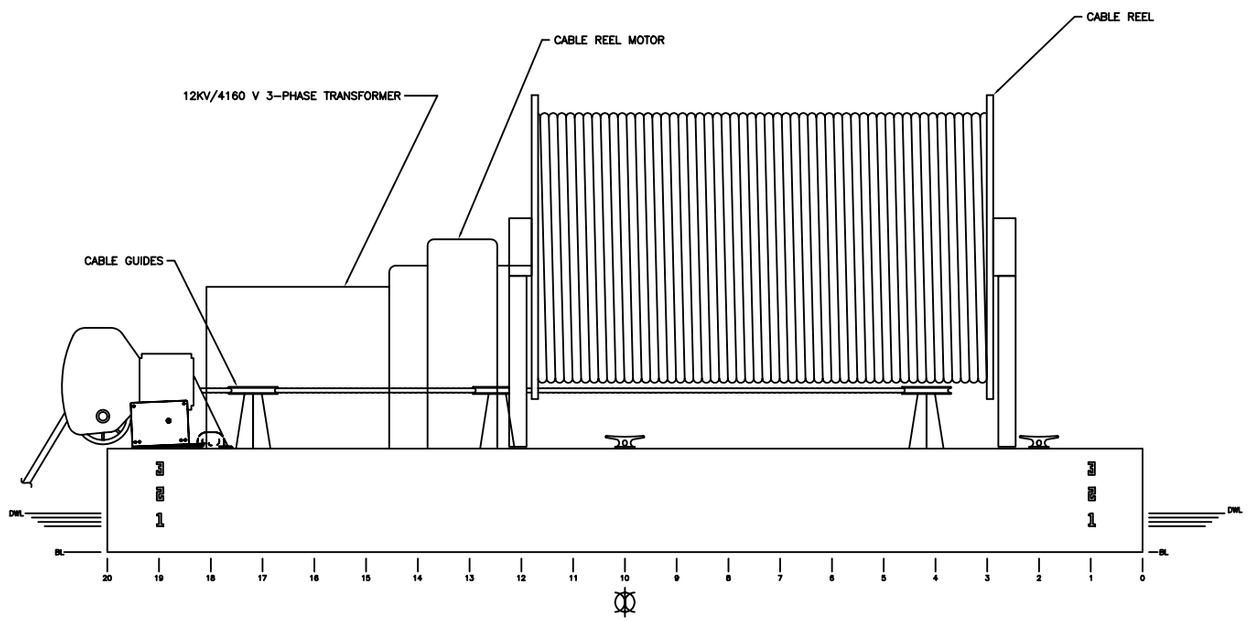

A OUTBOARD PROFILE

PLOT SCALE .375=12

MARINE DESIGN CENTER PHILADELPHIA, PA		DEPARTMENT OF THE ARMY MARINE DESIGN CENTER CORPS OF ENGINEERS		
LEAD PROJ ENGR HWW	RELEASED – CH MACH SECT	US Army Corps of Engineers	SANTA BARBARA CUTTERHEAD DREDGE GENERAL ARRANGEMENTS	
PROJ ENGR – HULL —	RELEASED – CH HULL SECT			
PROJ ENGR – MACH HWW	SUBMITTED – PROJ MGR			
DRAWN BY: JVM	RECOMMENDED – CH DES BR	SIZE D	PROJECT NO. 2304	DWG. NO. 548-B215-01 REV A
DATE	APPROVED – DIRECTOR	SCALE NONE		SHEET 1 OF 1

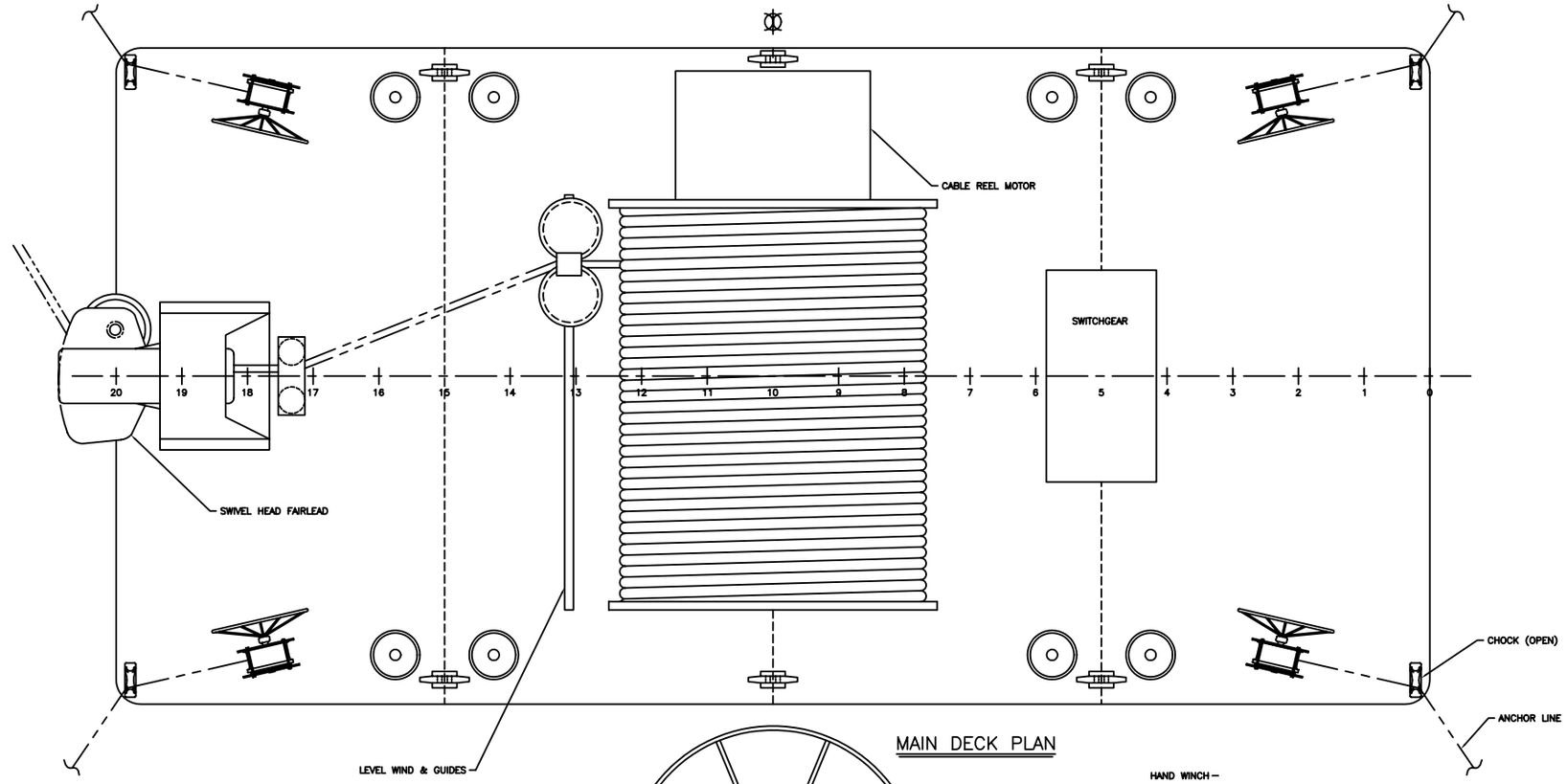

MAIN DECK PLAN

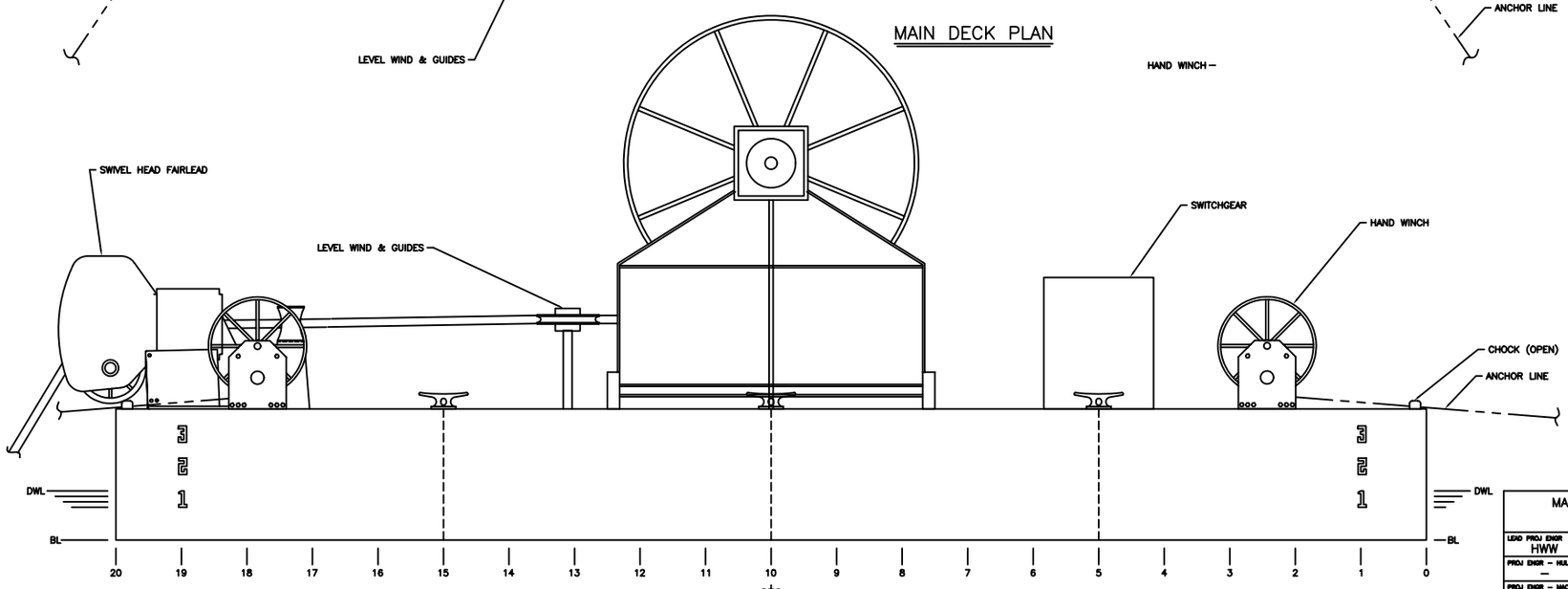

OUTBOARD PROFILE

REVISIONS

REV	DESCRIPTION	DATE	APPROVED
A	1. RESIZED AND RELOCATED THE CABLE REEL. 2. ADDED A TRANSFORMER ON AFT. END. 3. ADDED CABLE GUIDES AND LEVEL WIND MECHANISM. 4. CHANGED LOCATION OF HAND WINCHES. 5. CHANGED LOCATION OF THE MANHOLES. 6. CHANGED LOCATION OF THE KEVELS. 7. CHANGED FAIRLEAD TO SHOW SWIVEL HEAD	11SEP95	J. B. FAIL
B	1. REMOVED TRANSFORMER AND REPLACED WITH A SWITCHGEAR. 2. RELOCATED THE CABLE REEL. 3. RELOCATED THE HAND WINCHES AND ADDED CHOCKS. 4. RELOCATED THE SWITCHGEAR.	12DEC95	J. B. FAIL

~ PARTICULARS ~

MOLDED

LENGTH ____ 40'-0"

BEAM ____ 20'-0"

MARINE DESIGN CENTER
PHILADELPHIA, PA

LEAD PROJ ENGR HWW	RELEASED – CH MACH SECT
PROJ ENGR – HULL —	RELEASED – CH HULL SECT
PROJ ENGR – MACH HWW	SUBMITTED – PROJ MGR
DRAWN BY: JVM	RECOMMENDED – CH DES BR
DATE	APPROVED – DIRECTOR

DEPARTMENT OF THE ARMY
MARINE DESIGN CENTER
CORPS OF ENGINEERS

US Army Corps of Engineers

SANTA BARBARA CABLE REEL BARGE

GENERAL ARRANGEMENTS

SIZE	PROJECT NO.	DWG. NO.	REV
D	2304	548-B215-02	B

SCALE NONE SHEET 1 OF 1

PLOT SCALE .5=12

ZONE	REV	REVISIONS DESCRIPTION	DATE	APPROVED

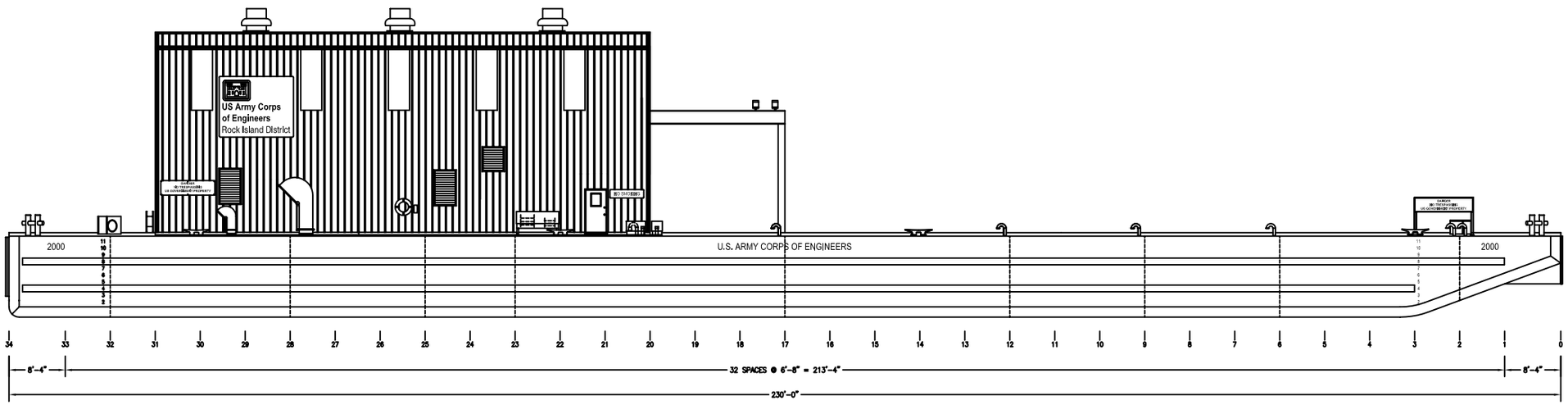

OUTBOARD PROFILE

PRINCIPLE CHARACTERISTICS

LOA	230'-0"
BEAM	68'-0"
DEPTH @ SIDE	12'-0"
DECK LOADING	1000#/SQ. FT.
DECK LOAD @ GATE LOADING ZONE	6625#/SQ. FT.

CLASSED ABS MALTESE CROSS A1 BARGE
DECK CARGO, RIVER SERVICE
W/ REINFORCEMENT "B"

ORANGE SHIPBUILDING COMPANY INC.,
ORANGE, TX 77630

DRAWN	JD WALDREP
DATE	
CHECKED BY	
DWG. NO.	205-01
A.B.S. APP'VD	
M.D.C. APP'VD	

DEPARTMENT OF THE ARMY
MARINE DESIGN CENTER
CORPS OF ENGINEERS

230'-0" X 68'-0" X 12'-0" WORK/LAYOUT BARGE

OUTBOARD PROFILE

SIZE	PROJECT NO.	DWG. NO.	REV
D	2351	552-D205-01	0

SCALE 1/8"=1'-0" SHEET 1 OF 1

ZONE	REV	REVISIONS DESCRIPTION	DATE	APPROVED

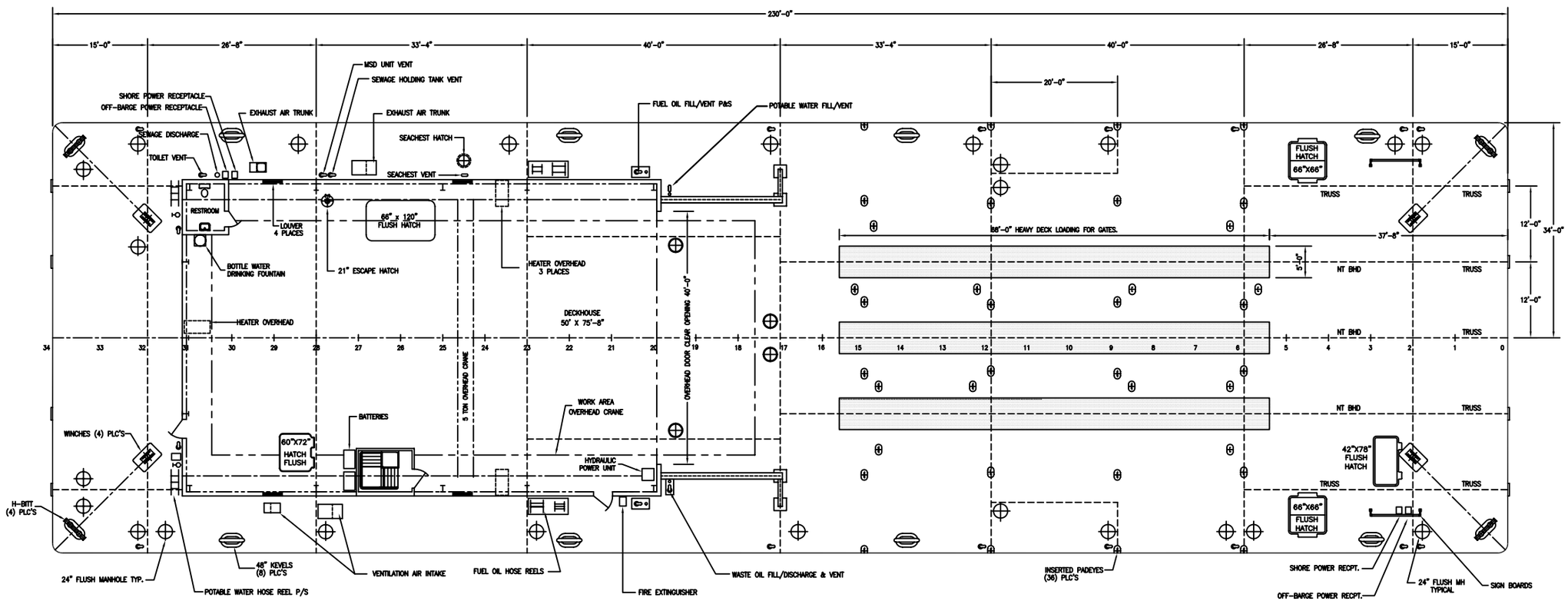

MAIN DECK ARRANGEMENT

ORANGE SHIPBUILDING COMPANY INC., ORANGE, TX 77630	DEPARTMENT OF THE ARMY MARINE DESIGN CENTER CORPS OF ENGINEERS
	230'-0" X 68'-0" X 12'-0" WORK/LAYOUT BARGE
DRAWN Joe Waldrep	GENERAL ARRANGEMENT
DATE	
CHECKED BY	
DWG. NO. 215-01	SIZE D · PROJECT NO. 2351 · DWG. NO. 552-D215-01 · REV 0
A.B.S. APP'VD	
N.D.C. APP'VD	SCALE 1/8"=1'-0" · SHEET 1 OF 2

ZONE	REV	REVISIONS DESCRIPTION	DATE	APPROVED

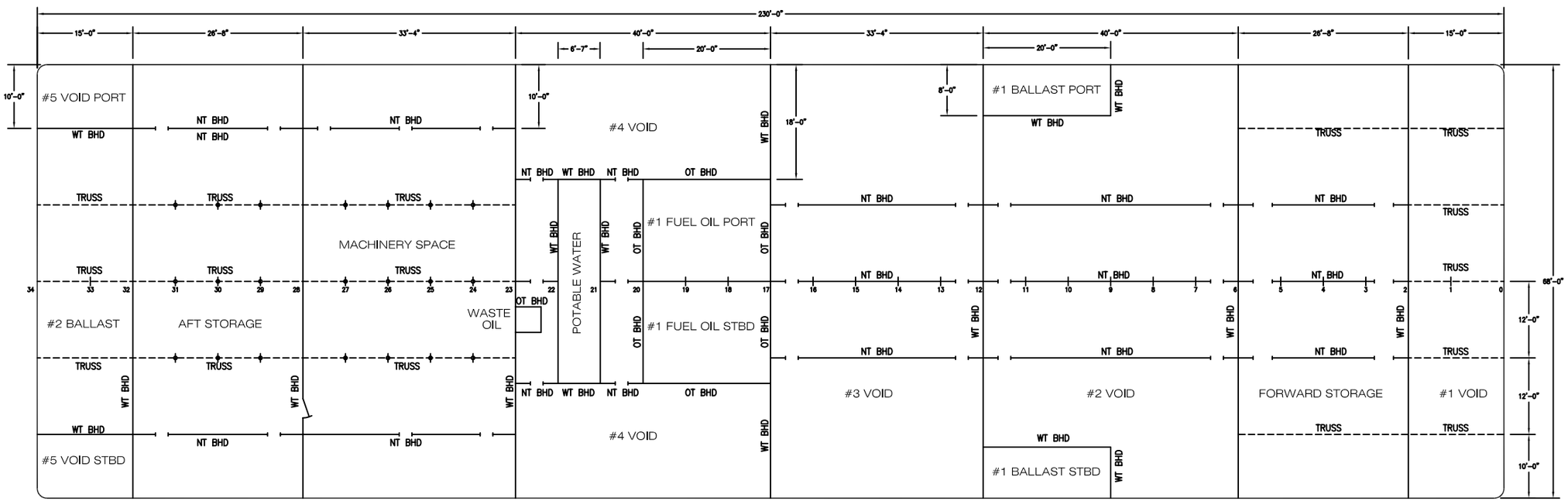

HOLD ARRANGEMENT

ORANGE SHIPBUILDING COMPANY INC., ORANGE, TX 77630	DEPARTMENT OF THE ARMY MARINE DESIGN CENTER CORPS OF ENGINEERS	
DRAWN Joe Waldrep	230'-0" X 68'-0" X 12'-0" WORK/LAYOUT BARGE	
DATE	GENERAL ARRANGEMENT	
CHECKED BY		
DWG. NO. 215-01	SIZE D / PROJECT NO. 2351 / DWG. NO. 552-D215-01	REV 7
A.B.S. APP'VD		
N.D.C. APP'VD	SCALE 1/8"=1'-0"	SHEET 2 OF 2

REVISIONS			
REV	DESCRIPTION	DATE	APPROVED

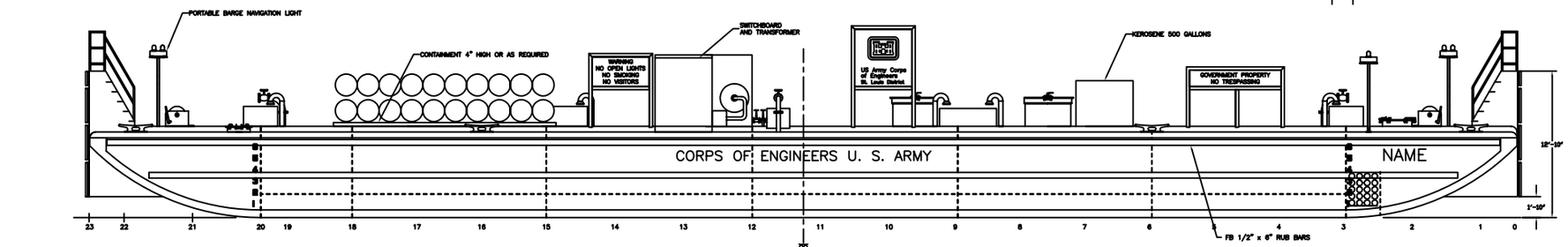

OUTBOARD PROFILE

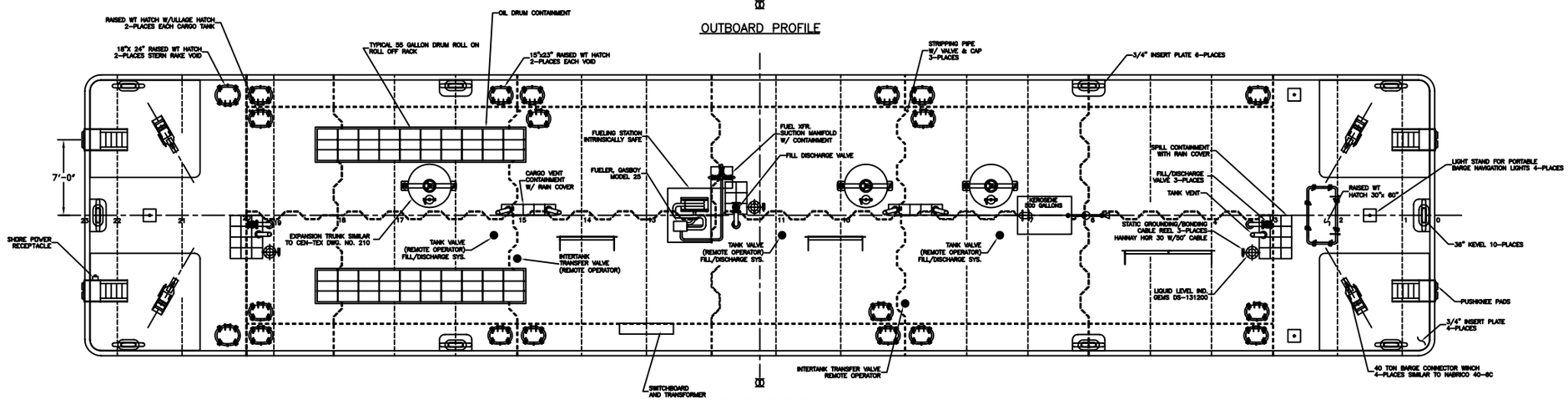

MAIN DECK PLAN

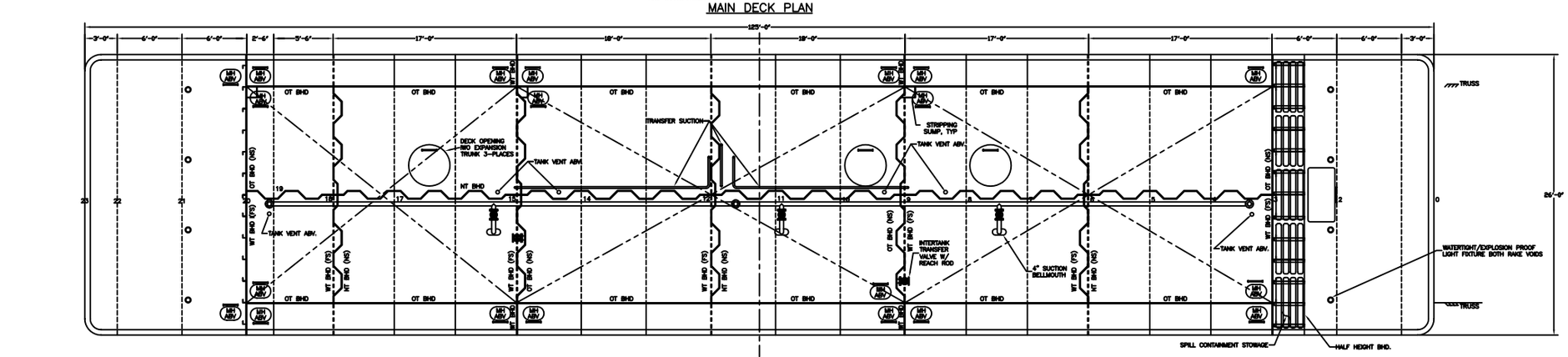

HULL PLAN

PARTICULARS

LENGTH 125'-0"
BEAM 26'-0"
DEPTH 7'-6"
CAPACITY 78,000 GALLON
CAPACITY 1857 BARRELS (US)

MARINE DESIGN CENTER PHILADELPHIA, PA	DEPARTMENT OF THE ARMY MARINE DESIGN CENTER CORPS OF ENGINEERS
DR. BY J.B. FAIL / DES. BY RGB+HVW / CHK'D BY	US Army Corps of Engineers
SUBMITTED - FIELD ENG	(CEMVS) FUEL OIL BARGE 125'x26'x7'-6"
RECOMMENDED - DEPT CH	GENERAL ARRANGEMENTS
APPD FOR THE DIRECTOR - CH DES BR	SIZE F / PROJECT NO. 2412 / DWG. NO. 588-B215-01 / REV
DATE APRIL 25, 1997	SCALE 1/4" = 1'-0" / SHEET 1 OF 1

REVISIONS				
ZONE	REV	DESCRIPTION	DATE	APPROVED

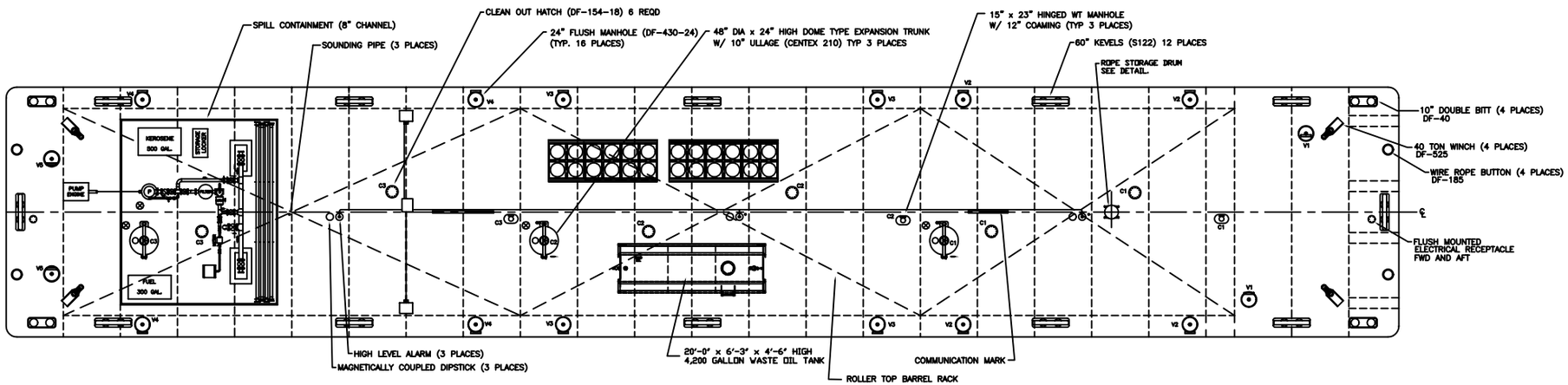

GENERAL ARRANGEMENT

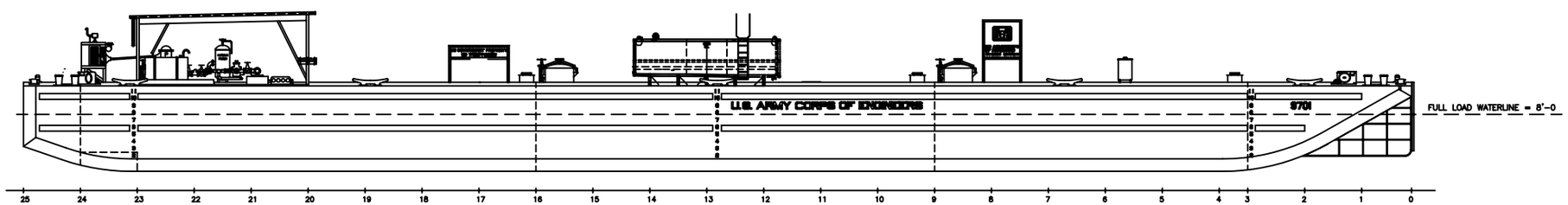

OUTBOARD PROFILE

PARTICULARS

LENGTH-----195'-0"
BEAM-------35'-0"
DEPTH------12'-6"

TO CLASS: ABS ■ A1 OIL TANK BARGE, RIVER SERVICE

MARINE DESIGN CENTER		DEPARTMENT OF THE ARMY MARINE DESIGN CENTER CORPS OF ENGINEERS		
LEAD PROJ ENGR D MASCENIK	RELEASED - CH MACH SECT	US Army Corps of Engineers	195' X 35' X 12'-0" OIL BARGE	
PROJ ENGR - HULL	RELEASED - CH HULL SECT		WASTE OIL TANK INSTALLATION	
PROJ ENGR - MACH	SUBMITTED - PROJ MGR			
DRAWN BY	RECOMMENDED - CH DES BR	SIZE D	PROJECT NO. 2411	DWG NO. 597-C215-01 REV A
DATE 7 FEB 00	APPROVED - DIRECTOR	SCALE 1/8"=1'-0"		SHEET 1 OF 1

DRAWING NUMBER	SHEET	REV
602–D205–01	1 OF 1	–

REVISIONS

ZONE	REV	DESCRIPTION	DATE	APPROVED
ALL	–	FIRST ISSUE – AS BUILT	12/07/01	

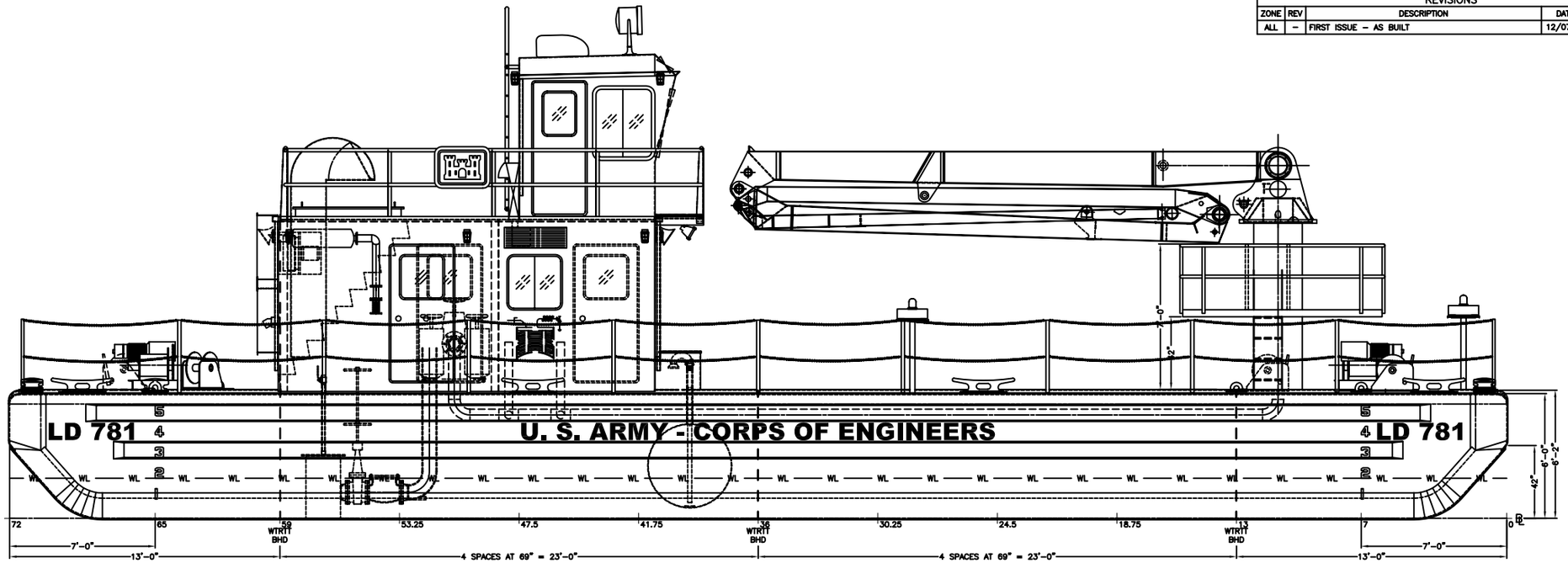

OUTBOARD PROFILE

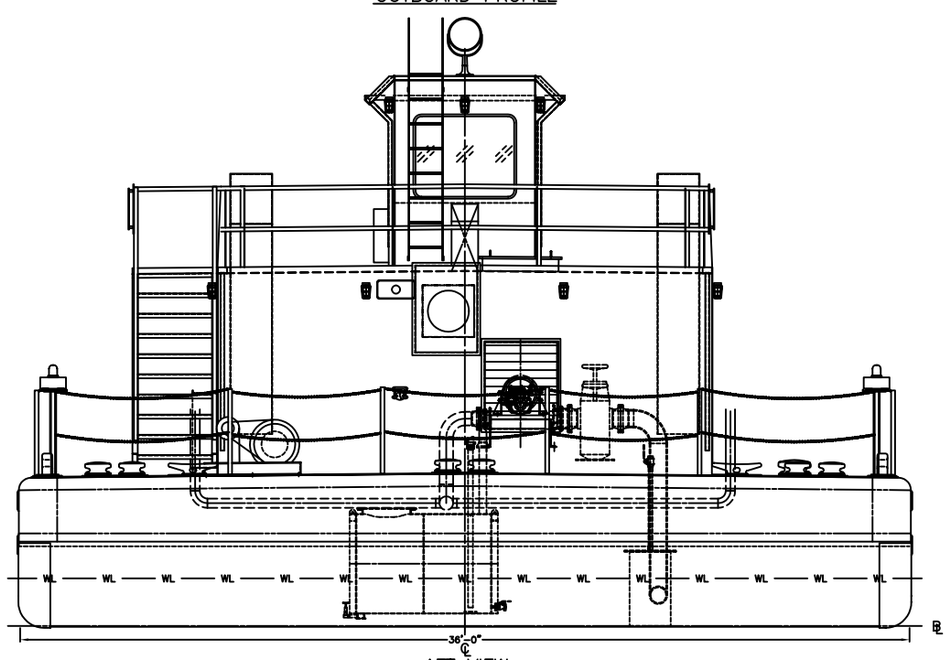

AFT VIEW

PRINCIPAL CHARACTERISTICS

LENGTH (MOLDED)	72'–0"
BEAM (MOLDED)	36'–0"
DEPTH (MOLDED)	6'–0" (AT SIDE)
DEPTH (MOLDED)	6'–2" (AT C.L.)
DESIGN DRAFT ABOUT	2'–0"

BASIC MARINE, INC.
P.O BOX 548
ESCANABA, MI. 49829
(906) 786–7120

BMI HULL No. 112

DRAWN BY: W.G. HITT
DATE: 07 DECEMBER 2001
APPROVED BY:

DACW61–00–C–0018

TGMD 99109/D205011–

DEPARTMENT OF THE ARMY
MARINE DESIGN CENTER
CORPS OF ENGINEERS

US Army Corps of Engineers

(CELRL) "OLMSTED" WASHDOWN BARGE
72'–0" x 36'–0" x 6'–0"
OUTBOARD PROFILE
AND AFT VIEW

SIZE	MDC PROJECT	DRAWING NUMBER	REV.
D	2487	602–D205–01	–

SCALE: 3/8" = 1'–0"
SHEET: 1 OF 1

PLOT LIMITS AT SCALE:3/8=12

DRAWING NUMBER	SHEET	REV
602-D215-01	1 OF 3	—

REVISIONS

ZONE	REV	DESCRIPTION	DATE	APPROVED
ALL	—	FIRST ISSUE – AS BUILT	12/04/01	

GENERAL NOTES

1. THE BOOM (SHOWN ON SHEET 2) IS A SCHWING AMERICA INC. (MODEL KVM 32XL).
2. FRAME NUMBERING REPRESENTS DISTANCE IN FEET FROM HEADLOG

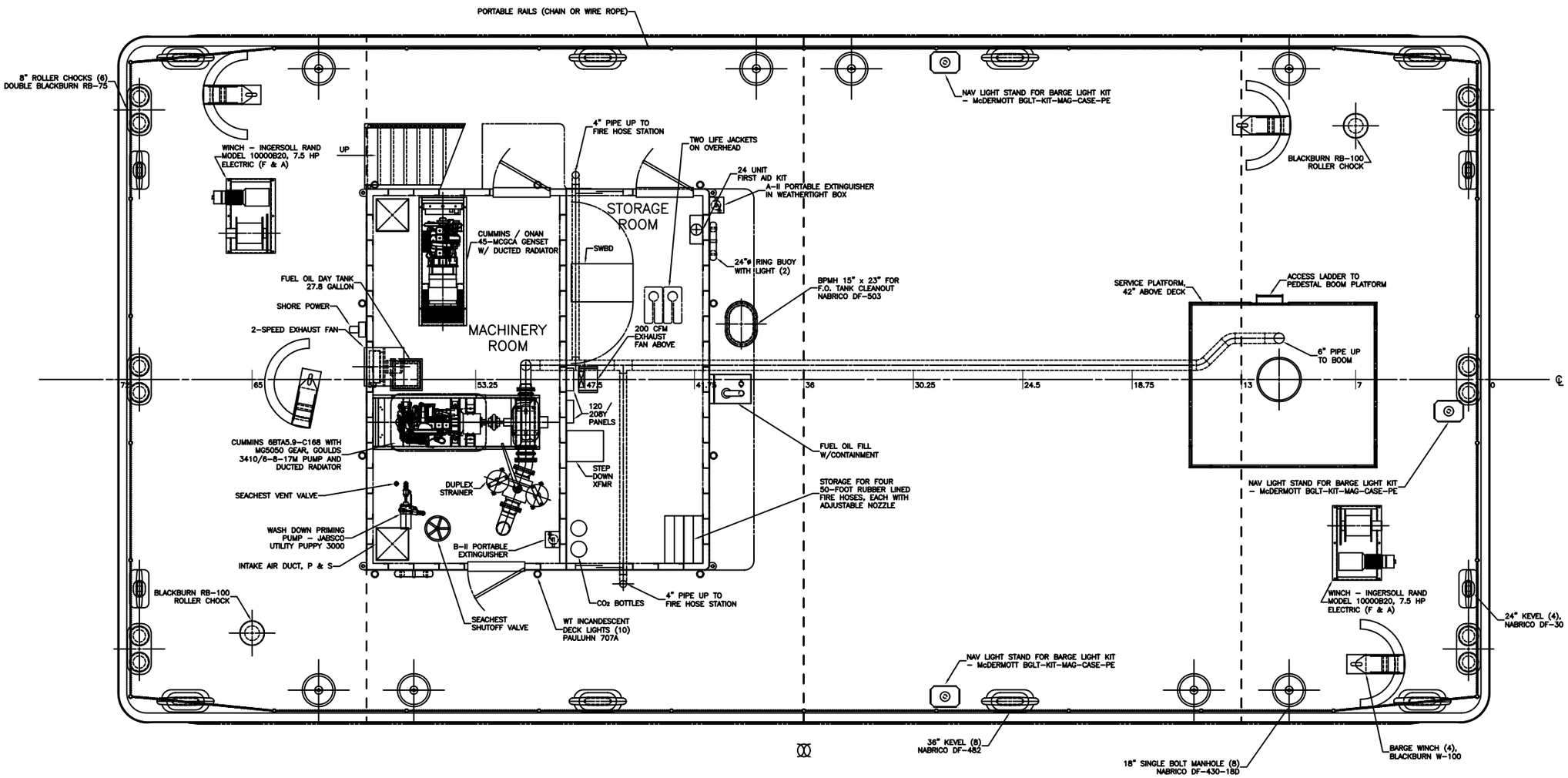

PLAN MAIN DECK

BASIC MARINE, INC. P.O BOX 548 ESCANABA, MI. 49829 (906) 786-7120	DEPARTMENT OF THE ARMY MARINE DESIGN CENTER CORPS OF ENGINEERS
BMI HULL No. 112	(CELRL) "OLMSTED" WASHDOWN BARGE 72'-0" x 36'-0" x 6'-0"
DRAWN BY: W.G. HITT	US Army Corps of Engineers
DATE: 04 DECEMBER 2001	GENERAL ARRANGEMENT
APPROVED BY:	
DACW61-00-C-0018	SIZE: D · MDC PROJECT: 2487 · DRAWING NUMBER: 602-D215-01 · REV.: —
TGMD 99109/D215011-	SCALE: 3/8" = 1'-0" · SHEET: 1 OF 3

PLOT LIMITS AT SCALE: 3/8=12

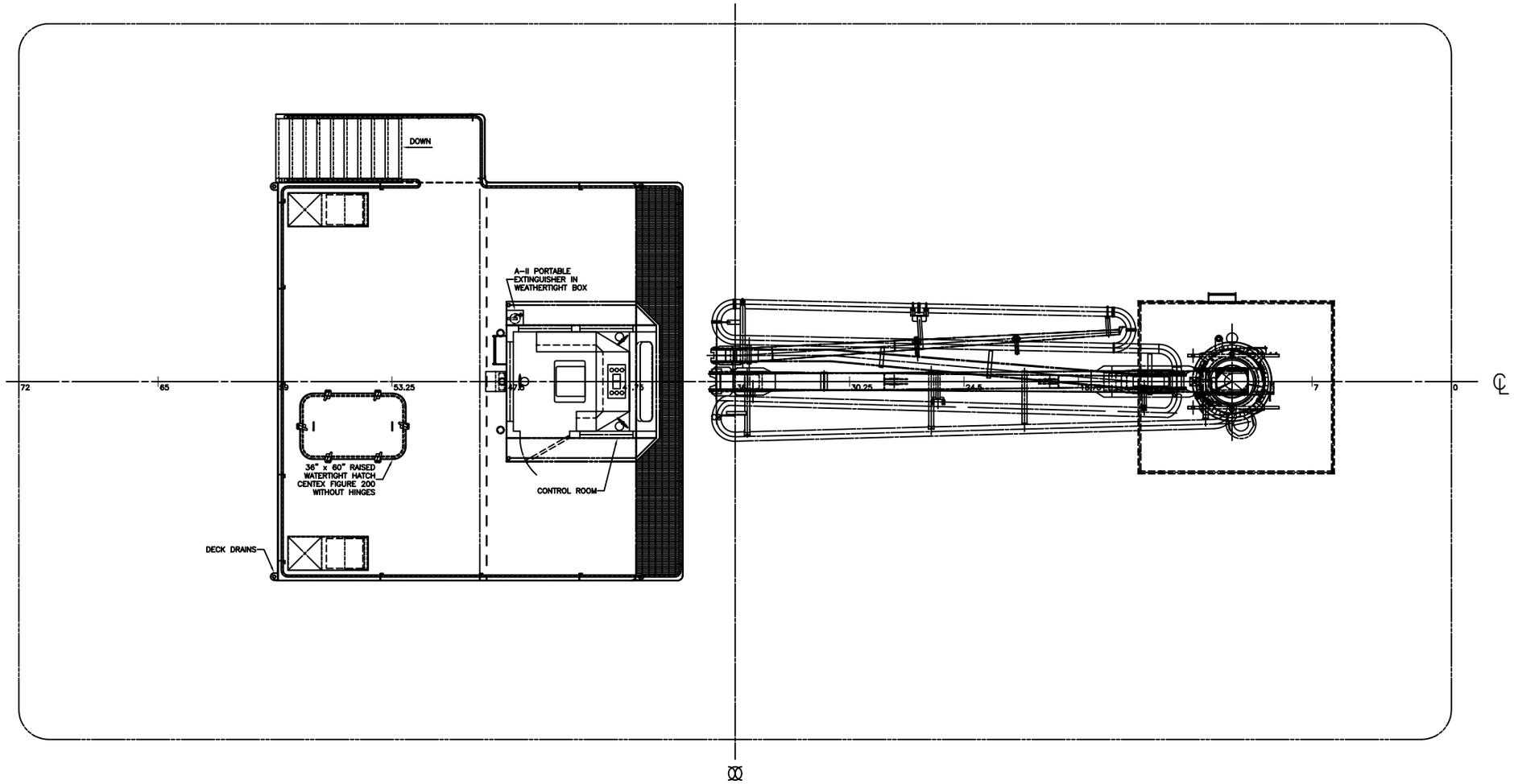

UPPER DECKHOUSE/OPERATORS LEVEL

DRAWN BY: W.G. HITT				
DATE: 04 DECEMBER 2001	SIZE	MDC PROJECT	DRAWING NUMBER	REV.
DACW61-00-C-0018	D	2487	602-D215-01	—
TGMD 99109/D215012-	SCALE: 3/8" = 1'-0"		SHEET: 2 OF 3	

PLOT LIMITS AT SCALE: 3/8=12

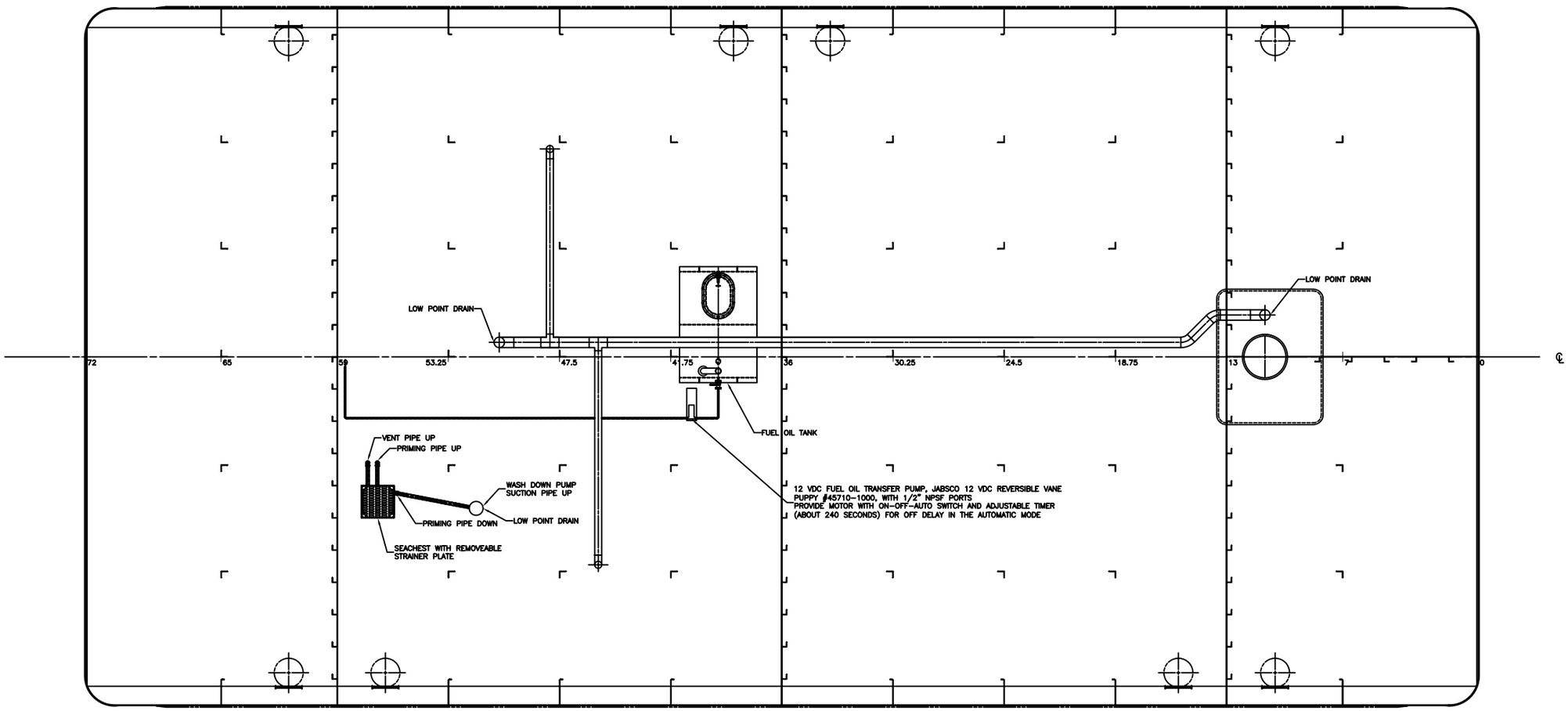

HOLD

DRAWN BY: W.G. HITT			
DATE: 04 DECEMBER 2001	SIZE D	MDC PROJECT 2487	DRAWING NUMBER 602-D215-01 REV. —
DACW61-00-C-0018			
TGMD 99109/D2150132-	SCALE: 3/8" = 1'-0"		SHEET: 3 OF 3

PLOT LIMITS AT SCALE: 3/8=12

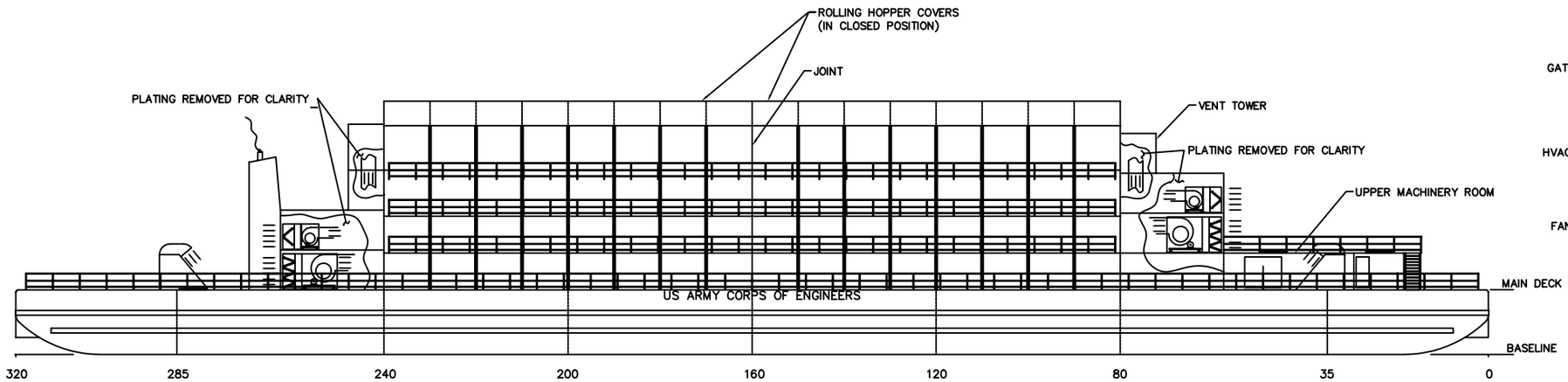

PROFILE

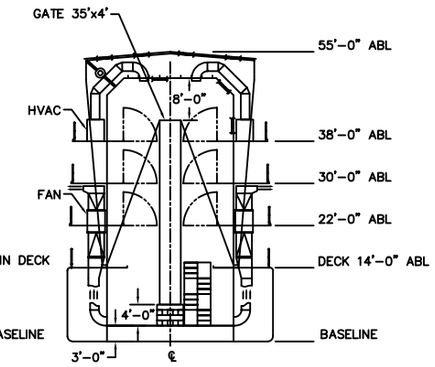

MIDSHIP SECTION

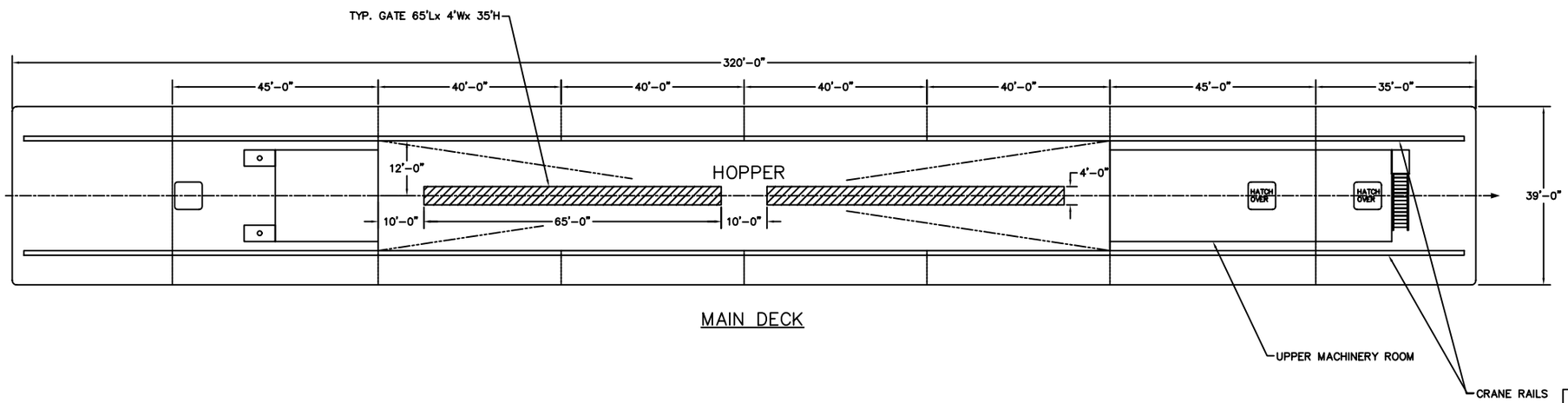

MAIN DECK

DEPARTMENT OF THE ARMY
MARINE DESIGN CENTER
CORPS OF ENGINEERS

US Army Corps of Engineers

ROCK ISLAND DISTRICT (CEMVR)
HOPPER BARGE 320'x 39'x 14'

CONCEPTUAL
GENERAL ARRANGEMENTS

SIZE	PROJECT NO.	DWG. NO.	REV
B	2466	608-A215-01	–

SCALE 1:350 SHEET 1 OF 1

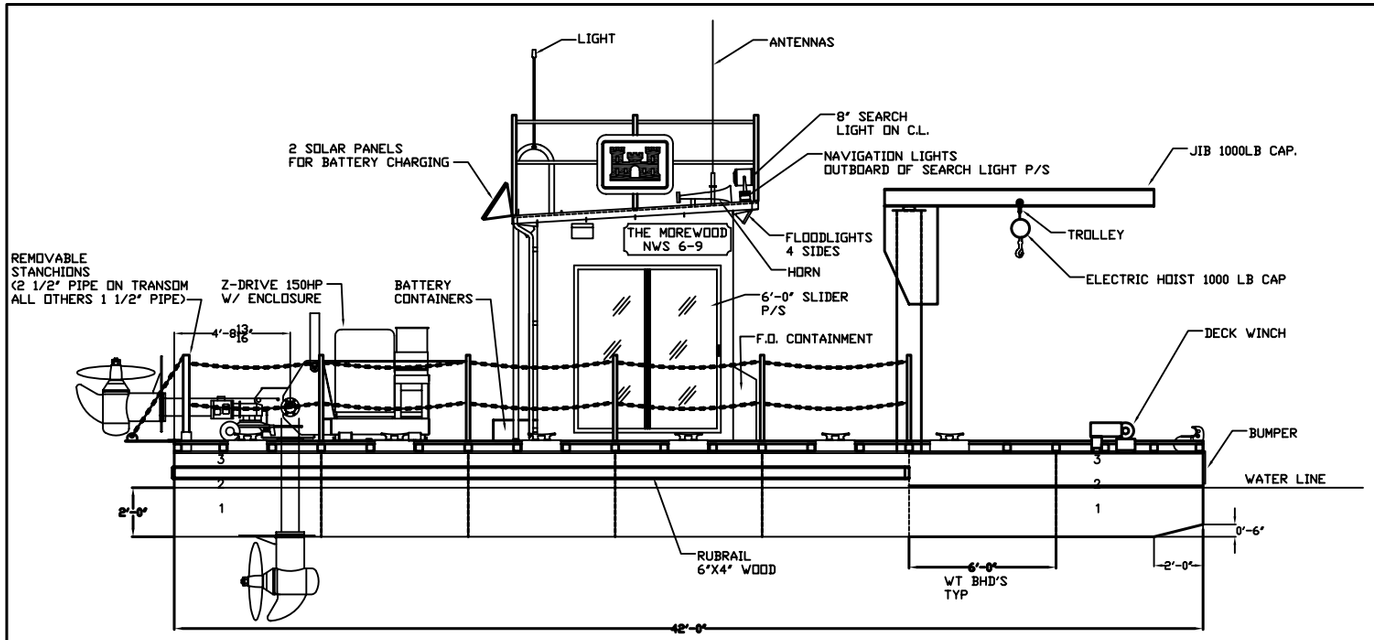

PROFILE

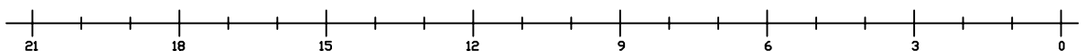

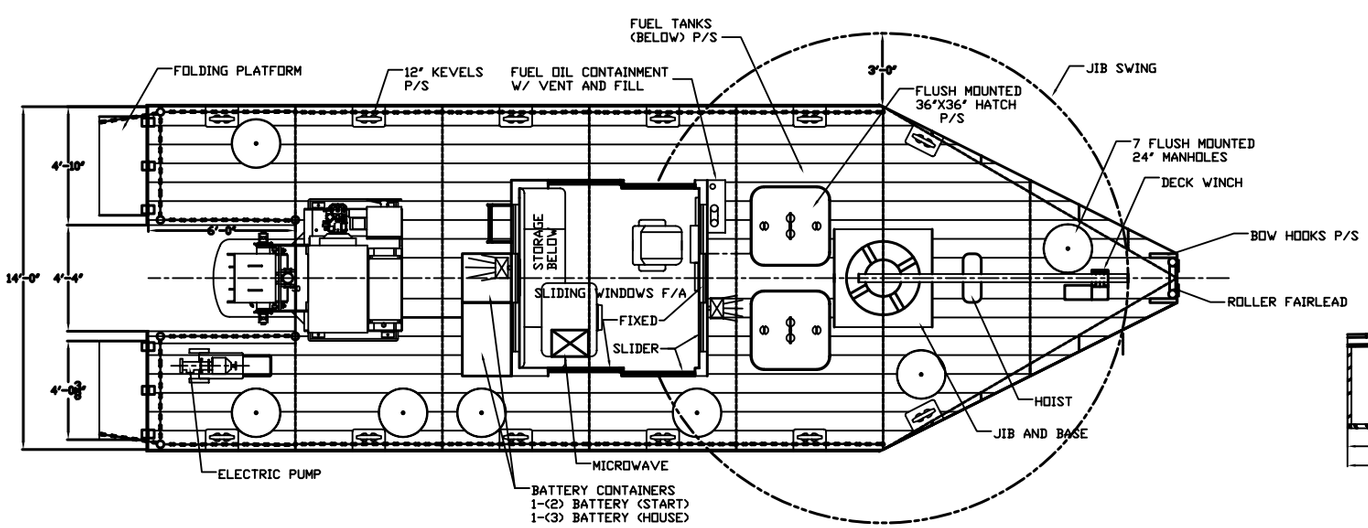

ARRANGEMENT

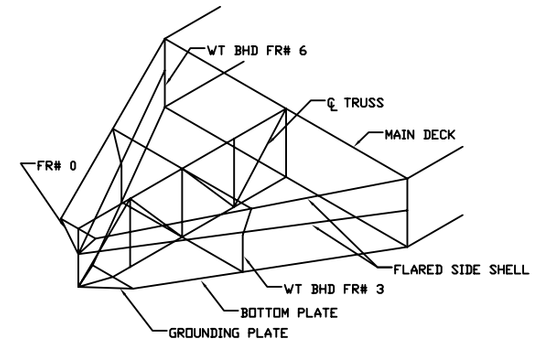

3-D BOW

PARTICULARS

LENGTH 42'-0"
BEAM 14'-0"
HULL DEPTH 3'-6" @ ℄

NOTES:

1. FRAME SPACING IS 2'-0" AND WATERTIGHT BULKHEAD SPACING IS 6'-0".

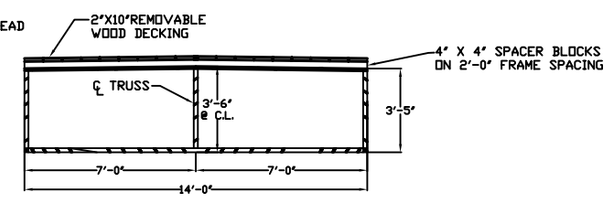

FRAME SECTION

MARINE DESIGN CENTER PHILADELPHIA, PA		DEPARTMENT OF THE ARMY MARINE DESIGN CENTER CORPS OF ENGINEERS
LEAD PROJ ENGR	RELEASED - CH MACH SECT	US Army Corps of Engineers — SEATTLE DISTRICT DRIFT CONTROL FACILITIES BARGE 42 FEET
PROJ ENGR - HULL	RELEASED - CH HULL SECT	ARRANGEMENT
PROJ ENGR - MACH	SUBMITTED - PROJ MGR	
DRAWN BY: CIESLAK	RECOMMENDED - CH DES BR	SIZE D · PROJECT NO. 2508 · DWG. NO. 619-A205-01 · REV -
DATE FEB 12 ,2001	APPROVED - DIRECTOR	SCALE 3/8" = 1'-0" · SHEET 1 OF 1